Wilkerson Combination Units

NEW!

Standard Transparent Bowl with Guard

Automatic Drain				Manual Drain			
Size	***Part #***	SCFM	**Price/E**	Size	***Part #***	SCFM	**Price/E**
3/8"	***C28-03A***	120	**$608.15**	3/8"	***C28-03M***	120	**$557.55**
1/2"	***C28-04A***	135	**608.15**	1/2"	***C28-04M***	135	**557.55**
3/4"	***C28-06A***	125	**608.15**	3/4"	***C28-06M***	125	**557.55**

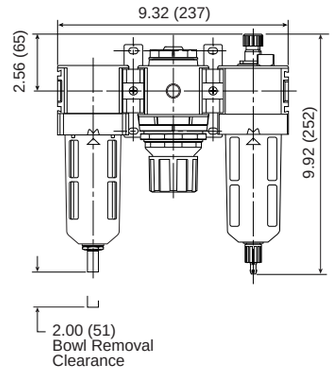

Standard Metal Bowl with Sight Glass

Automatic Drain				Manual Drain			
Size	***Part #***	SCFM	**Price/E**	Size	***Part #***	SCFM	**Price/E**
3/8"	***C28-03AMB***	120	**$637.40**	3/8"	***C28-03MMB***	120	**$586.80**
1/2"	***C28-04AMB***	135	**637.40**	1/2"	***C28-04MMB***	135	**586.80**
3/4"	***C28-06AMB***	125	**637.40**	3/4"	***C28-06MMB***	125	**586.80**

Jumbo Transparent Bowl with Guard

Automatic Drain				Manual Drain			
Size	***Part #***	SCFM	**Price/E**	Size	***Part #***	SCFM	**Price/E**
3/4"	***C31-06A***	170	**$808.25**	3/4"	***C31-06M***	170	**$757.65**
1"	***C31-08A***	340	**803.25**	1"	***C31-08M***	340	**752.65**

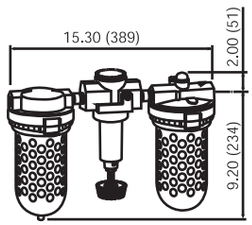

Jumbo Metal Bowl with Sight Glass

Automatic Drain				Manual Drain			
Size	***Part #***	SCFM	**Price/E**	Size	***Part #***	SCFM	**Price/E**
3/4"	***C31-06AMB***	170	**$907.50**	3/4"	***C31-06MMB***	170	**$856.85**
1"	***C31-08AMB***	340	**902.50**	1"	***C31-08MMB***	340	**851.85**

SCFM ratings at 150 PSIG inlet pressure.

GOODYEAR RUBBER PRODUCTS INC.
Call Toll Free: 1-866-711-4673
WebSales@GoodyearRubberProducts.com
We Ship World Wide