Reel Catalog

Now Including
Nordic™
Series 3900
Page 30

Series 7000

Please call Goodyear Rubber Products to order any products shown in this catalog
1-727-822-4672 or 1-800-367-4673 toll free in the USA
Email inquiries to: Sales@GoodyearRubberProducts.com

REELCRAFT®

Wind Things Up With Reelcraft™

GOODYEAR RUBBER PRODUCTS INC.
Call Toll Free: 1-866-711-4673
WebSales@GoodyearRubberProducts.com
We Ship World Wide

REELCRAFT
Wind Things Up With Reelcraft™

PRODUCT SOLUTIONS
Engineered for Excellence

7000 Series

Fry's Napa AutoCare Center, Columbia City, Indiana

Why use hose reels?

Why use hose reels? Because they make hose handling more efficient and safer. Your hoses, cables and cords will last up to five times longer. You will improve hose management, which decreases labor costs. Your chances of injuries from tripping hazards will decrease, which saves lost work time, medical bills and higher insurance. You also save the cost of replacing expensive hoses, cables and cords that get run over by fork lifts and other vehicles, which saves equipment costs. Here are the most compelling reasons to use hose, cord and cable reels.

80000 Series

Wabash National Corporation, Lafayette, Indiana

Efficiency

An organized, clean workplace is proven to be more efficient

Safety

Reduce accidents and insurance expense: Slips, trips, and falls are the leading causes of work stoppage losses in industry.

600968

Orchard Ridge Country Club
Fort Wayne, Indiana

600910

Orchard Ridge Country Club
Fort Wayne, Indiana

Protect Equipment

Hoses and cords last five times longer when stored on a reel.

7000 Series

Stop Leakages

Hoses on reels can reduce the threat of expensive air and water leakages.

The Bottom Line:

Increase Productivity

Locating hoses and cords where and when you need them increases productivity. All of these factors contribute to an improved work environment, which saves time, equipment and money.

OSHA says reduce your slips, trips and falls

Slips, trips and falls constitute the majority of general industry accidents, which cause 15% of all accidental deaths, and are second only to motor vehicles as a cause of fatalities. The OSHA standards for walking and working surfaces apply to all permanent places of employment, except

GOODYEAR RUBBER PRODUCTS INC.
Call Toll Free: 1-866-711-4673
WebSales@GoodyearRubberProducts.com
We Ship World Wide

Reelcraft: Better by Design™

Reelcraft's reels are better by design because of our lasting commitment to excellence. Our engineering team is well known for designing durable, high quality products. Our standard features include durable, corrosion-resistant powder coat paint, multi-position guide arms for versatile mounting options and heavy-duty, reinforced steel stampings for increased strength. Our reels are permanently factory-lubricated for a long, trouble-free service life. All of these features, and many more, add up to make "The Reelcraft Difference.™"

Rely on Reelcraft's commitment to excellence for the highest quality hose, cord and cable reels.

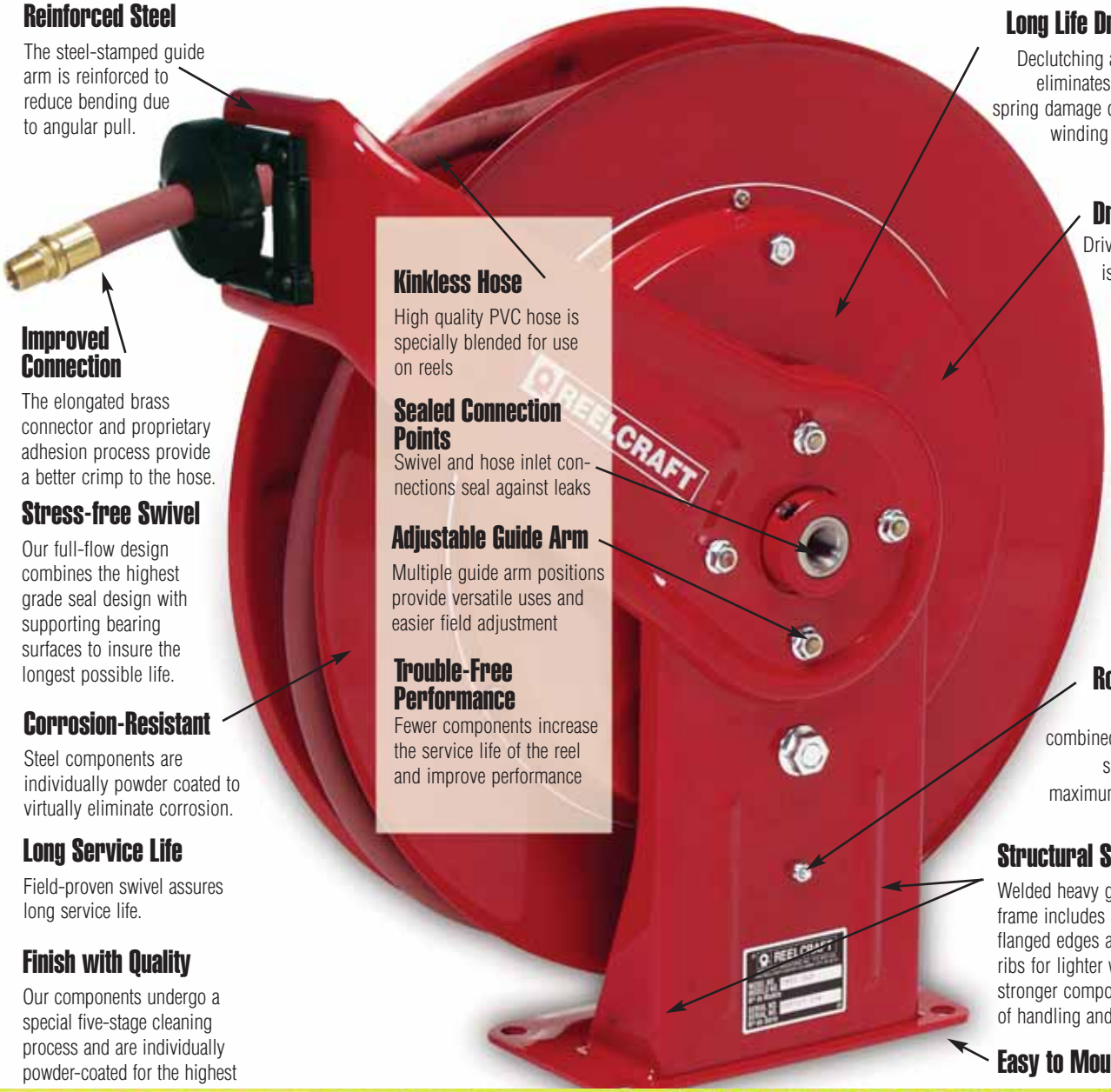

Reinforced Steel
The steel-stamped guide arm is reinforced to reduce bending due to angular pull.

Improved Connection
The elongated brass connector and proprietary adhesion process provide a better crimp to the hose.

Stress-free Swivel
Our full-flow design combines the highest grade seal design with supporting bearing surfaces to insure the longest possible life.

Corrosion-Resistant
Steel components are individually powder coated to virtually eliminate corrosion.

Long Service Life
Field-proven swivel assures long service life.

Finish with Quality
Our components undergo a special five-stage cleaning process and are individually powder-coated for the highest

Kinkless Hose
High quality PVC hose is specially blended for use on reels

Sealed Connection Points
Swivel and hose inlet connections seal against leaks

Adjustable Guide Arm
Multiple guide arm positions provide versatile uses and easier field adjustment

Trouble-Free Performance
Fewer components increase the service life of the reel and improve performance

Long Life Drive Spring
Declutching arbor virtually eliminates possibility of spring damage due to reverse winding of reel spool.

Enclosed Drive Spring
Drive mechanism is enclosed for protection against the environment.

Robust Latch
Wide profile combined with special spring assures maximum service life.

Structural Strength
Welded heavy gauge steel frame includes dramatically flanged edges and stiffening ribs for lighter weight, yet stronger components for ease of handling and installation.

Easy to Mount

GOODYEAR RUBBER PRODUCTS INC.
Call Toll Free: 1-866-711-4673
WebSales@GoodyearRubberProducts.com
We Ship World Wide

REELCRAFT

Wind Things Up With Reelcraft™

TABLE OF CONTENTS
Spring Driven Hose Reels

Reelcraft is the industry leader for hose, cord and cable reels available anywhere in the world. Our key focus is to develop quality products that make hoses, cords and cables more productive, keep them easily accessible and make them last longer. Reelcraft is a highly innovative company in our product development and our manufacturing techniques. We are the only U.S. hose reel manufacturer to hold ISO 9001:2000 accreditation and we lead the industry in developing new cutting edge products. Our lean manufacturing and Six Sigma programs give us the core competencies to continue to deliver the world's best reel products.

Walt Sterneman
President of Reelcraft Industries

Spring Driven Hose Reels

Lighter, Economical 6
Series RT
1/4", 3/8", 1/2" I.D.
A new, economical lighter hose reel designed for low, medium and high pressure applications.

RT650-OLP
Patent No. 7,150,425

Compact Reels 7
Series 4000/5000/5005
1/4", 3/8", 1/2" I.D.
For all general air, water, oil or grease applications.

A5850 OLP

Heavy Duty Reels 8
Series 7000
1/4", 3/8", 1/2", 3/4" I.D.
Our best-selling reel for low, medium and high pressure applications.

7850 OLP

Dual Pedestal Reels 9
Series DP7000
1/4", 3/8", 1/2" I.D.
Compact interlocking base and balanced swivel.
NEW!

DP7850 OLP
Patent Pending

Mobile Base Reels 10
Series 8000 & D8000
1/4", 3/8", 1/2" I.D.
The aluminum cast base and arm offer the highest rigidity among this class of hose reels.

D8850 OLP

Dual Pedestal Reels 11
Series 80000 & D80000
3/8", 1/2", 3/4", 1" I.D.
Our largest pedestal-style hose reel with heavy-duty, ball-bearing style swivel for low, medium and high pressure applications.

82100 OLP

Large Mobile Reels 12
Series E9000
1/2", 3/4", 1", 1¼", 1½" I.D.
Great for high volume air, water, fuel and petroleum applications.

E 9350 OLPBW

Twin Hydraulic 13
Series TH
1/4", 3/8", 1/2" I.D.
Medium pressure for operating hydraulic cylinders, motors or tools.

TH86050 OMP

All rights reserved. No part of the material protected by this copyright may be reproduced or utilized in any form or by any means, electronic or mechanical, including photocopying, recording, broadcasting or by any other information storage and retrieval system without written permission from Reelcraft Industries, Inc.

Reelcraft, Wind Things Up, Work Smarter, Nordic, Hose Boss, ReelTek, Polycraft, Safe-T-Reel, Better by Design, Built Better to Perform Better and Rely on Reelcraft are the trademarks and service marks of Reelcraft Industries, Inc. registered in the United States and/or other jurisdictions. You shall not display, disparage, dilute or taint our trademarks and service marks or use any confusingly similar marks, or use our marks in such a way that would misrepresent the identity of the owner. Any permitted use of our trademarks and service marks inures to the benefit of Reelcraft Industries, Inc.

All other trademarks, service marks or registered trademarks appearing on these pages are the trademarks or service marks of their respective owners. Super Swivel, Full Circle swivel, Viton, Quiet Speed, Buna, Push Lok, Quiet Speed, Stubby, Stubby II, Delrin and Pos-i-Latch are not owned by Reelcraft Industries, Inc.

Two Year Limited Warranty

Reelcraft now offers a two year limited warranty. All products manufactured by Reelcraft Industries, Inc. are warranted to be free of defects due to faulty material or workmanship for 24 months from date of shipment, except hose. Normal wear and tear is not considered a defect in material or workmanship. Reelcraft's liability shall be limited to repair or replacement of defective material during the warranty period and will be at Reelcraft's discretion when returned pre-paid to its plant or authorized service depot. The warranty does not cover damage caused by accident, abuse, neglect or improper installation. Reelcraft products must be installed, maintained and operated in accordance to the recon electric motors, filter, lubricators on air motors and flexible inlet connections will void warranty. Equipment, products, components and hoses not manufactured by Reelcraft are subject to the original manufacturer's guarantee and warranties. Hoses carry a six month warranty as listed by the manufacturer. Reelcraft will assist in filing claims, but does not have any additional responsibility if original manufacturer denies warranty claim. Products built to customer specifications and requirements, Nordic series and series 40 or products incorporating variation from cataloged items are considered special and are not subject to cancellation or returnable for credit under any circumstances. Reelcraft reserves the right to modify or alter product, dimensions, design and construction to improve performance.

GOODYEAR RUBBER PRODUCTS INC.
Call Toll Free: 1-866-711-4673
WebSales@GoodyearRubberProducts.com
We Ship World Wide

TABLE OF CONTENTS
Spring Driven Hose Reels

Reelcraft Industries, Inc. supports our complete line of products with more than 30 years' experience in the design and manufacture of hose, cord and cable reels. Storing hoses, cables and cords on a reel increases safety, efficiency, productivity and provides ergonomic advantages to the work environment.

We manufacture a complete line of products for most applications, including industrial, agricultural, golf and automotive markets. For complete product information or help in solving a hose or cord handling problem, please contact our friendly customer service representatives at 1-800-444-3134 or visit www.reelcraft.com.

FD83075 OLP

Fuel Reels 14

3/4", 1", 1 1/4", 1 1/2" I.D.

For low pressure applications. Equipped with fuel-grade hose.

Grounding Reels

G 3050 Y G 3050

Grounding Reels 15

Series G 3000

Used to dissipate static electricity when transferring flammable materials on fuel trucks, in chemical plants and more.

7000 OMS

Complete Line of Stainless Steel

Stainless Steel Reels 16

3/8", 1/2", 3/4", 1" I.D.

Full line of stainless steel reels for low and medium pressure applications.

5835 OLPSW23

Pre-rinse & Potable Water Hose Reels 18

3/8", 1/2" I.D.

Several models for pre-rinse applications and potable (drinking) water.

SGA3650 OLP

Economical Composite Reels 19

S Series

3/8", 1/2" I.D.

Lightweight, easy-to-handle for low pressure air or water. Ideal for wash-down applications.

NEW!

CU6050 LN

Pressure Wash 20

1/4", 3/8", 1/2" I.D.

Many models for high pressure applications. Spring driven, hand crank and motor driven rewind.

H16000

General Use 21

Series CU and H

3/8", 1/2", 3/4" I.D.

Ideal for medium duty general use hand crank applications.

EA33112 L12D

Heavy Duty 22

Series 30000

1/2", 3/4", 1" I.D.

For low and medium pressure applications requiring long hose. Hand crank, air motor, bevel crank and electric motor rewind.

Reelcraft's global offices serve:

- ✓Europe/UK
- ✓Canada
- ✓Asia/Philippines
- ✓Central America

GOODYEAR RUBBER PRODUCTS INC.

Call Toll Free: 1-866-711-4673

WebSales@GoodyearRubberProducts.com

We Ship World Wide

REELCRAFT
Wind Things Up With Reelcraft™

TABLE OF CONTENTS
Large Frame Reels

Our mission: It is the goal of Reelcraft Industries, Inc. to manufacture the best industrial hose, cord and cable reels and reel-related products in the world.

Reelcraft will continually strive to provide the quality of product, timeliness of delivery and economy of price that will satisfy our customers' needs.

Reelcraft's product quality starts with modern engineering techniques for maximum strength through better design, better materials and tested and proven products. We are committed to superior manufacturing processes by producing our steel components from hard tooling (dies) that increase product strength and reliability compared with simply bending metal in press breaks. In addition, we offer more levels of industrial products: Good, Better, Best and Ultimate. Our customers report that superior value is why they choose Reelcraft reels. All of these qualities and more add up to make "The Reelcraft Difference.™"

ISO 9001:2000 Certified

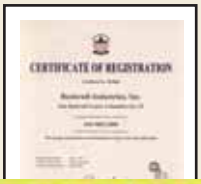

Large Frame Hose Reels

All Welded "A" Frame 26
Series 1200
3/4", 1" I.D.
Welded "A" frame design for increased rigidity and maximum durability. Hand crank or motor driven.

Series 1200

Steel Large Frame 28
Series 2400/3900/3700/5900
1/2", 3/4", 1", 1 1/2", 2", 3", 4" I.D.
Rugged and durable, gear-drive, crank rewind or chain and sprocket drive are powered by electric motor.

Series 3900

Modular, T-Slot 29
Series 40
1", 1 1/4", 1 1/2" I.D.
New durable, reliable, modular large frame reel is fully customizable to fit your specs. Gear drive, chain drive, hand crank and bevel crank.

Series 40: Gear drive
Patent Pending

Fire Fighting Reels 33
Series 5000
1/2", 3/4", 1" I.D.
Lightweight, aluminum frame with mounting brackets, designed specifically for fire fighting applications.

Series 5000

Propane Reels 34
Series 40/2000/2024/ 80000/D80000
3/4", 1", 1 1/2" I.D.
Propane reels designed with U/L certified swivel for LPG dispensing. Motor driven and spring driven reels.

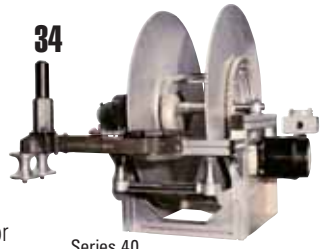
Series 40
Patent Pending

Petroleum Service 36
Series 3800
1 1/2", 2" I.D.
Inverted reel fits under the canopy of petroleum service trucks. Fluid path is designed for dispensing petroleum.

Series 3800

Single Wrap Reels 37
Series 6000
1 1/2", 2", 3" I.D.
Single wrap reel offers the narrowest profile available to store and retrieve fueling hoses.

Series 6000

Guide Arm Positions and Suffix Codes

Guide Arm Suffix Codes:
The suffix codes (as indicated at right) must be added after the model number to specify desired guide arm position. For example, 5635 OLP SW designates side wind guide arm position.

Additional Notes: D 9000 O series reels are shipped in the **BW** position and all other series reels are shipped in the **TW** position unless otherwise specified. Series 4000 and 5000 reels ordered in the **BW** position are available in constant tension only. The 80000 Series is shipped in the **SW** position.

Suffix Codes

TW **Top Wind**
Ceiling and under floor

SW **Side Wind**
Wall or column; floor or pit

GOODYEAR RUBBER PRODUCTS INC.
Call Toll Free: 1-866-711-4673
WebSales@GoodyearRubberProducts.com
We Ship World Wide

TABLE OF CONTENTS
Power and Light / Welding Reels

LG3050 163 8

Power Cord and Light Reels

Light and Medium Duty 38
Series LD and LG

Light and power cord reels for less demanding applications. Quality materials offering light weight solutions.

LH2080 143

Hand Crank Reels 38
Series LH

Portable power made easier with the storage of up to 100' of 10/3 power cord.

L 4035 162 2

Heavy Duty Reels 39
Series L4000, L5000, 30000, Nordic CR

A variety of light and power source options.

Complete Family of Welding Reels

STW3450 OLP

Dual Hose Reels 44
Series TW and BA

1/4", 3/8" I.D.

For low pressure oxygen/ acetylene applications. Includes "T" grade reels for a variety of gases.

WC7000

Spring Driven Welding Cable 46
Series WC7000/WC80000

Stores work lead or electrode lead cable when not in use.

Hand Crank Welding Cable 46
Series CEA 30000

Stores work lead or electrode lead cable when not in use.

T-2462-0

Multi-Configurations 47
Safe-T-Reel™ Series

Ideal where space, weight and flexibility are key for manual winding of hose, cord, oxygen/ acetylene and welding cable.

Heavy Duty Tool Balancer TBL 10-23

Tool Balancers 48
TB Series

Makes tools nearly weightless. Reduces operator fatigue and damage from dropping tools.

Parts/Accessories 49

Mounting brackets, chain shrouds, roller brackets, motors, switches, hose bumpers, hose assemblies and replacement hoses.

Low pressure Air/Water Hose

Eight Reel Display Stand S602037-1

DISPLAY STANDS

S602037-1 Eight Reel Display
S602037-2 Six Reel Display

Reelcraft's new reel display stand conveniently displays up to eight reels and features removable universal brackets for ease of mounting. It is easily assembled/disassembled and bears the Reelcraft logo. Reels sold separately. Weight: 64lbs. (29 kg).

S600539* - Eight Reel Centerpiece Display Stand.

*Any four Series 4000 or 5000 can be installed on the top.

*Any four Series RT, 5005, or 7000 can be installed on the bottom.

*Series RT and 5005 require either 600626 or 600230 additional mounting brackets.

Eight Reel Centerpiece

GOODYEAR RUBBER PRODUCTS INC.
Call Toll Free: 1-866-711-4673
WebSales@GoodyearRubberProducts.com
We Ship World Wide

REELCRAFT

Wind Things Up With Reelcraft™

LIGHTWEIGHT, ECONOMICAL
Series RT

RT650-OLP

Patent No. 7,150,425

Made in USA

Spring Driven Air/Water/Oil/Grease

Series RT - 1/4", 3/8", 1/2" I.D.

Reelcraft presents Series RT, a new, lighter spring-driven hose reel designed for applications that are less demanding, yet require a product that can withstand industrial use.

Structural Strength
Heavy gauge steel stampings with re-enforced ribs increase strength.

Trouble-Free Maintenance
The industrial-grade drive spring is protected from the environment.

Hose Retracts Every Time
The latch mechanism is mounted on the guide arm to eliminate latch-out at full extension of hose.

Long Lasting Latch Spring
A stainless steel torsion spring is used on the latch to insure maximum life.

Long Swivel Life
Our field-proven swivel assures long service life.

Corrosion Resistance
Steel components are individually powder coated and teamed with composite materials, which virtually eliminates corrosion.

Versatile Mounting
The guide arm can be adjusted to seven convenient locations.

Lighter weight
Composite spool and steel components make the reel strong yet lighter.

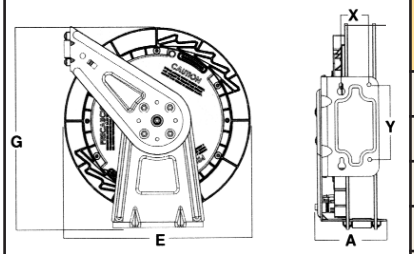

DIMENSIONS	Series RT
	in / mm
A	See Chart
E	16.5 419
G	17.875 448
X	2.25 57
Y	6 152

MODELS WITH HOSE			HOSE CAPACITY					MODELS WITHOUT HOSE			
MODEL	WEIGHT	PRESSURE	I.D.	O.D.	(M)NPTF OUTLET	(F)NPTF INLET	LENGTH	MODEL	WEIGHT	PRESSURE	A
	lbs / kg	psi / bar	in / mm	in / mm	in	in	ft / m		lbs / kg	psi / bar	in / mm
LOW PRESSURE AIR/WATER REELS Maximum Temperature 150° F (65° C)											
RT425-OLP	21 10	300 21	1/4 6	.500 13	1/4	3/8	25 8	RT402-OLP	19 9	300 21	5.75 146
RT435-OLP	22 11	300 21	1/4 6	.500 13	1/4	3/8	35 11	RT403-OLP	19 9	300 21	5.75 146
RT450-OLP	25 12	300 21	1/4 6	.500 13	1/4	3/8	50 15	RT405-OLP	21 10	300 21	5.75 146
RT465-OLP	27 12	300 21	1/4 6	.500 13	1/4	3/8	65 20	----------	-- --	--- ---	--- ---
RT625-OLP	22 11	300 21	3/8 10	.640 16	1/4	3/8	25 8	RT602-OLP	19 9	300 21	5.75 146
RT635-OLP	23 11	300 21	3/8 10	.640 16	1/4	3/8	35 11	RT603-OLP	19 9	300 21	5.75 146
RT650-OLP	29 14	300 21	3/8 10	.640 16	1/4	1/2	50 15	RT605-OLP CA	23 11	300 21	6.25 159
RT825-OLP CA	28 13	300 21	1/2 13	.781 20	1/4	1/2	25 8	RT802-OLP	23 11	300 21	6.25 159
RT835-OLP	30 14	300 21	1/2 13	.781 20	1/2	1/2	35 11	RT803-OLP CA	23 11	300 21	6.25 159
RT850-OLP	35 16	300 21	1/2 13	.781 20	1/2	1/2	50 15	RT805-OLP	25 12	300 21	7.75 159
MEDIUM PRESSURE OIL REELS Maximum Temperature 150° F (65° C)											
RT625-OMP	27 12	1000 69	3/8 10	.640 16	3/8	3/8	25 8	RT602-OMP	22 10	1000 69	5.75 146
RT635-OMP	30 14	1000 69	3/8 10	.640 16	3/8	3/8	35 11	RT603-OMP	22 10	1000 69	5.75 146
RT650-OMP	35 16	1000 69	3/8 10	.640 16	3/8	1/2	50 15	RT605-OMP	25 12	1000 69	7.75 197
RT825-OMP	31 15	1000 69	1/2 13	.820 21	1/2	3/8	25 8	RT802-OMP	23 11	1000 69	6.25 159
RT835-OMP CA	33 16	1000 69	1/2 13	.820 21	1/2	1/2	35 11	RT803-OMP	23 11	1000 69	6.25 159
HIGH PRESSURE GREASE REELS Maximum Temperature 150° F (65° C)											
RT425-OHP	28 13	5000 345	1/4 6	.590 15	1/4	3/8	25 8	RT402-OHP	22 10	5000 345	5.75 146
RT435-OHP	31 15	5000 345	1/4 6	.590 15	1/4	3/8	35 11	RT403-OHP	22 10	5000 345	5.75 146
RT625-OHP	30 14	4000 276	3/8 10	.750 19	3/8	3/8	25 8	RT602-OHP	22 10	5000 345	5.75 146

GOODYEAR RUBBER PRODUCTS INC.
Call Toll Free: 1-866-711-4673
WebSales@GoodyearRubberProducts.com
We Ship World Wide

COMPACT QUIET LATCH
Series 4000, 5000 and 5005

Spring Driven Air/Water/Oil/Grease
Series 4000, 5000 and 5005 - 1/4", 3/8", 1/2" I.D.

Series 4000 and 5000 reels are all steel construction and compact for a wide range of applications with critical space requirements. A full flow shaft and swivel assures maximum product delivery. The Quiet Speed latch mechanism offers quiet operation combined with latch cam technology insuring longer latching life and trouble-free performance.

Series 5000 E reels are the same as 5000 O reels except E Series reels are fully enclosed. To order, change the model number suffix letter O to E, Example: 5430 OHP becomes 5430 EHP. Add 8 lbs. to open reel weight. Enclosed version in not available for series 5005 reels.

A5850 OLP

Made in USA

ENCLOSED MODEL

5435 ELP

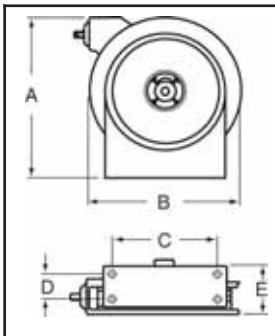

DIMENSIONS

	4000 O		5000 O		5405, 5605 and A5805		A5806	
	in	mm	in	mm	in	mm	in	mm
A	12.875	327	14.5	368	17.5	445	17.5	445
B	12.625	321	13.5	343	16.5	419	16.5	419
C	8	203	9.75	248	9.75	248	9.75	248
D	2.5	64	2.5	64	2.5	64	2.5	64
E	5.375	136	6	152	6	152	7	179

Four 5/16" (8mm) diameter mounting holes.

MODELS WITH HOSE			HOSE CAPACITY					MODELS WITHOUT HOSE		
MODEL	WEIGHT	PRESSURE	I.D.	O.D.	(M)NPTF OUTLET	(F)NPTF INLET	LENGTH	MODEL	WEIGHT	PRESSURE
	lbs / kg	psi / bar	in / mm	in / mm	in	in	ft / m		lbs / kg	psi / bar
LOW PRESSURE AIR/WATER REELS* Maximum Temperature 150° F (65° C)										
4420 OLP	17 8	300 21	1/4 6	.500 13	1/4	3/8	20 6	4400 OLP	17 8	500 35
4425 OLP	19 9	300 21	1/4 6	.500 13	1/4	3/8	25 8	4400 OLP	17 8	500 35
4435 OLP	20 10	300 21	1/4 6	.500 13	1/4	3/8	35 11	4400 OLP	17 8	500 35
5450 OLP	26 12	300 21	1/4 6	.500 13	1/4	3/8	50 15	5400 OLP	20 9	500 35
4617 OLP	19 9	300 21	3/8 10	.640 16	1/4	3/8	17 5	4600 OLP CA	17 8	500 35
4625 OLP	22 10	300 21	3/8 10	.640 16	1/4	3/8	25 8	4600 OLP CA	17 8	500 35
5635 OLP	25 12	300 21	3/8 10	.640 16	1/4	3/8	35 11	5600 OLP CA	21 10	500 35
5650 OLP	36 16	300 21	3/8 10	.640 16	1/4	3/8	50 15	5605 OLP	31 14	500 35
A5825 OLP	29 14	300 21	1/2 13	.781 20	1/2	3/8	25 8	A5800 OLP	22 10	500 35
A5835 OLP	38 17	300 21	1/2 13	.781 20	1/2	3/8	35 11	A5805 OLP	32 15	500 35
A5850 OLP	44 20	300 21	1/2 13	.781 20	1/2	3/8	50 15	A5806 OLP	35 16	500 35
MEDIUM PRESSURE OIL REELS** Maximum Temperature 210° F (99° C)										
5435 OMP	31 14	2750 190	1/4 6	.530 14	1/4	3/8	35 11	5400 OMP	26 12	3000 207
5630 OMP	30 14	2250 155	3/8 10	.780 20	3/8	3/8	30 9	5600 OMP	23 11	3000 207
A5825 OMP§ CA	31 14	2000 138	1/2 13	.820 21	1/2	3/8	25 8	A5800 OMP CA	32 15	3000 207
A5835 OMP	42 19	2000 138	1/2 13	.820 21	1/2	3/8	35 11	A5805 OMP	32 15	3000 207
HIGH PRESSURE GREASE REELS*** Maximum Temperature 210° F (99° C)										
5430 OHP CA	30 14	5000 345	1/4 6	.590 15	1/4	1/4	30 9	5400 OHP	23 11	5000 345
5435 OHP	42 19	5000 345	1/4 6	.590 15	1/4	1/4	35 11	5405 OHP	31 15	5000 345
5625 OHP	31 14	4000 276	3/8 10	.750 19	1/4	1/4	25 8	5600 OHP	26 12	5000 345

*Low pressure hose reels furnished standard with PVC hose. Compressed air hoses should not be converted to oxygen service - may cause explosion when O2 mixes with fuel. **Medium pres-

GOODYEAR RUBBER PRODUCTS INC.
Call Toll Free: 1-866-711-4673
WebSales@GoodyearRubberProducts.com
We Ship World Wide

REELCRAFT
Wind Things Up With Reelcraft™

HEAVY DUTY REEL
Series 7000

Fry's Napa AutoCare Center, Columbia City, IN

7850 OLP

Spring Driven Air/Water/Oil/Grease
Series 7000 - 1/4", 3/8", 1/2", 3/4" I.D.

Series 7000 is very robust and ideal for the most demanding applications. The reel's base and guide arms are formed from high-grade steel and engineered with structural forms and gussets to yield the greatest amount of strength. The standard low pressure hose is for air or water service only. The basic reel without hose can be used for air, water or oil. Consult Reelcraft for other products and hoses.

Made in USA

INSET: ENCLOSED MODEL

7650 ELP

APPLICATIONS

- Industrial
- Automotive Service Centers
- Transmission Shops
- Fleet Maintenance Facilities
- Pneumatic Tools
- Aircraft Maintenance
- Tire Stores
- Agriculture
- Farm and Ranch
- Service Trucks
- Wash Down
- Air and Water

Series 7000 E reels are the same as 7000 O reels except **E Series reels are fully enclosed.** To order, change the model number suffix letter O to E. Example, 7650 OHP becomes 7650 EHP. Add 17 lbs. to open reel weight.

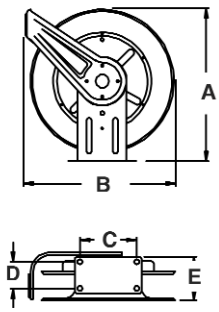

DIMENSIONS	7000 O		7000 E	
	in	mm	in	mm
A	20.25	521	20.75	527
B	19	483	20.75	527
C	7.875	200	7.875	200
D	3.875	98	3.875	98
E	7	178	8	204

Four 1/2" (12.7mm) diameter mounting holes.

For all metric thread connections over 1/2" add the suffix number 70 to indicate BSPT threads - example 7900 OLP70.

MODELS WITH HOSE			HOSE CAPACITY					MODELS WITHOUT HOSE		
MODEL	WEIGHT	PRESSURE	I.D.	O.D.	(M)NPTF OUTLET	(F)NPTF INLET	LENGTH	MODEL	WEIGHT	PRESSURE
	lbs / kg	psi / bar	in / mm	in / mm	in	in	ft / m		lbs / kg	psi / bar
LOW PRESSURE AIR /WATER REELS* Maximum Temperature 150° F (65° C)										
7650 OLP	47 22	300 21	3/8 10	.688 18	1/4	1/2	50 15	7600 OLP	42 19	500 35
7670 OLP	50 23	300 21	3/8 10	.688 18	1/4	1/2	70 22	7600 OLP	42 19	500 35
7850 OLP	51 24	300 21	1/2 13	.844 22	3/8	1/2	50 15	7800 OLP	43 20	500 35
7850 OLP121	51 24	300 21	1/2 13	.844 22	1/2	1/2	50 15	7800 OLP	43 20	500 35
7925 OLP	49 22	250 17	3/4 19	1.188 31	3/4	3/4	25 8	7900 OLP	44 20	500 35
F7925 OLP§	53 24	50 3.5	3/4 19	1.188 31	3/4	3/4	25 8	F7900 OLP	45 21	500 35
MEDIUM PRESSURE OIL REELS** Maximum Temperature 210° F (99° C)										
7650 OMP	55 25	2250 158	3/8 10	.690 18	1/2	1/2	50 15	7600 OMP	45 21	3000 207
7850 OMP	57 26	2000 141	1/2 13	.815 21	1/2	1/2	50 15	7800 OMP	42 19	3000 207
HIGH PRESSURE GREASE REELS*** Maximum Temperature 210° F (99° C)										
7450 OHP	57 26	5000 345	1/4 6	.590 17	1/4	1/2	50 15	7400 OHP	43 20	5000 345
7650 OHP	60 27	4000 276	3/8 10	.750 19	1/4	1/2	50 15	7600 OHP	46 21	5000 345

*Low pressure reels furnished standard with PVC hose. **Medium pressure reels furnished standard with S.A.E. 100 R1T one wire braid hose.

GOODYEAR RUBBER PRODUCTS INC.
Call Toll Free: 1-866-711-4673
WebSales@GoodyearRubberProducts.com
We Ship World Wide

COMPACT DUAL PEDESTAL
Series DP7000

Spring Driven Air/Water/Oil/Grease
Series DP7000 - 1/4", 3/8", 1/2" I.D.

Reelcraft's new DP7000 Series features a two-piece, non-welded, interlocking base that won't vibrate apart. Independent testing to military standards has proven DP7000 reels stand up to heavy vibration, making them ideal for truck mounted applications. Superbly engineered and compact, our patent-pending, interlocking steel-formed and stamped base design makes the base assembly especially strong, compact and resistant to vibration.

NEW!

DP7850 OLP
Patent Pending

✓ Meets or Exceeds Military Vibration for Truck Transport test.
MIL-STD-810F
500,000 mile equivalent

Made in USA

FEATURES

- ✓ **Strength and Stability** Interlocking dual base and guide arms are stamped from heavy gauge industrial steel and engineered gussets throughout make these reels strong and vibration-resistant.
- ✓ **Lighter weight** Latch pawl, cam, and hubs are die-cast aluminum for superior strength and to eliminate excessive weight.
- ✓ **Superior Corrosion-Resistance** A double adhesive gasket seals the spring case and steel parts are powder coated to provide excellent protection against weathering.
- ✓ **Low Maintenance** A permanent oil impregnated bronze bushing and stainless steel torsion spring are incorporated to ensure that, through frequent use, these reels require minimal maintenance.
- ✓ **Ease of Operation** The latch pawl is mounted on the guide arm to prevent latch out at full extension and the high impact, nylon-filled guide rollers make retraction and pay out nearly effortless.

DIMENSIONS

MODEL	A in / mm	B in / mm
LOW PRESSURE REELS		
DP7450 OLP	4 102	8 204
DP7650 OLP	4 102	8 204
DP7850 OLP	5 127	9 229
MEDIUM PRESSURE REELS		
DP7650 OMP	4 102	8 204
DP7850 OMP	5 127	9 229
HIGH PRESSURE REELS		
DP7450 OHP	4 102	8 204
DP7650 OHP	4 102	8 204

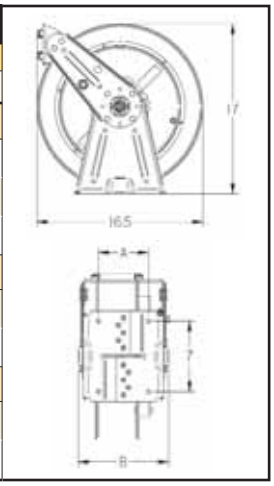

MODELS WITH HOSE			HOSE CAPACITY					MODELS WITHOUT HOSE		
MODEL	WEIGHT lbs / kg	PRESSURE psi / bar	I.D. in / mm	O.D. in / mm	(M)NPTF OUTLET in	(F)NPTF INLET in	LENGTH ft / m	MODEL	WEIGHT lbs / kg	PRESSURE psi / bar
LOW PRESSURE AIR/WATER REELS Maximum Temperature 150° F (65° C) w/hose / 210° F (99° C) w/o hose										
DP7450 OLP	46 21	300 21	1/4 6	.500 13	1/4	1/2	50 15	DP7400 OLP	42 19	500 35
DP7650 OLP	47 22	300 21	3/8 10	.688 18	1/4	1/2	50 15	DP7600 OLP	42 19	500 35
DP7850 OLP	50 23	300 21	1/2 13	.844 22	3/8	1/2	50 15	DP7800 OLP	43 20	500 35
MEDIUM PRESSURE OIL REELS Maximum Temperature 210° F (99° C)										
DP7650 OMP	55 25	2250 158	3/8 10	.690 18	3/8	1/2	50 15	DP7600 OMP	45 21	3000 207
DP7850 OMP	57 26	2000 141	1/2 13	.815 21	1/2	1/2	50 15	DP7800 OMP	42 19	3000 207
HIGH PRESSURE GREASE REELS Maximum Temperature 210° F (99° C)										

GOODYEAR RUBBER PRODUCTS INC.
Call Toll Free: 1-866-711-4673
WebSales@GoodyearRubberProducts.com
We Ship World Wide

REELCRAFT
Wind Things Up With Reelcraft™

MOBILE BASE REELS
Series D8000

D8650 OLP

INSET: ENCLOSED MODEL

D8650 ELP

Spring Driven Air/Water/Oil/Grease
Series D8000 - 1/4", 3/8", 1/2" I.D.

The aluminum cast base and arm of the Series D8000 offer the highest rigidity among this class of hose reels. The quality and reliability the professional expects in the tools and equipment they invest in is met and exceeded by Reelcraft products.

Series D8000 E reels are the same as D8000 reels except E Series reels are fully enclosed. To order, change the model number suffix letter O to E, add 17 lbs to the open reel weight.

Made in USA

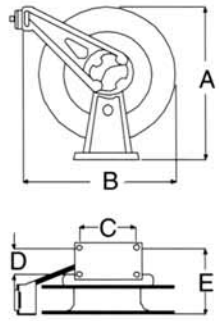

DIMENSIONS	D8000 O		D8000 E	
	in / mm		in / mm	
A	21.25	540	21.875	556
B	19	483	20.875	530
C	7.75	197	7.75	197
D	3.75	96	3.75	96
E	9.25	235	10.5	267

Inlet is 1/2" Outlet is 1/2" Four 1/2" (12.7mm) diameter mounting holes.

Series D8000 E reels are the same as D8000 O reels except **E Series reels are fully enclosed**. To order, change the model number suffix letter O to E. Example, D8650 OHP becomes D8650 EHP. Add 17 pounds to open reel weight.

FEATURES

- ✓ Aluminum guide arm and base are cast from 40,000 P.S.I. tensile strength material with 7% elongation which assures ultimate shock resistance. Cast aluminum frame gives maximum strength with minimum payload weight.
- ✓ A special heavy, double adhesive sided spring case gasket protects the main spring from damage (failure) caused by water, dirt or other foreign matter entering the spring case.
- ✓ Guide arm is field adjustable for floor, wall, ceiling, pit and truck mounting.
- ✓ Full flow shaft and swivel.
- ✓ Reel springs are manufactured from the highest quality scale-less blue tempered steel.
- ✓ Each component is coated individually with a durable baked-on powder coat finish. This provides an excellent high quality ultra violet radiation (sunlight) weather and chip resistant finish that will stay bright through years of use.

MODELS WITH HOSE			HOSE CAPACITY					MODELS WITHOUT HOSE		
MODEL	WEIGHT	PRESSURE	I.D.	O.D.	(M)NPTF OUTLET	(F)NPTF INLET	LENGTH	MODEL	WEIGHT	PRESSURE
	lbs / kg	psi / bar	in / mm	in / mm	in	in	ft / m		lbs / kg	psi / bar
LOW PRESSURE AIR/WATER REELS* Maximum Temperature 150° F (65° C) w/hose / 210° F (99° C) w/o hose										
D8650 OLP	48 22	300 21	3/8 10	.688 18	1/4	1/2	50 15	D8600 OLP	40 19	500 35
D8670 OLP	52 24	300 21	3/8 10	.688 18	1/4	1/2	70 21	D8600 OLP	40 19	500 35
D8850 OLP	52 24	300 21	1/2 13	.844 22	3/8	1/2	50 15	D8800 OLP	41 19	500 35
MEDIUM PRESSURE OIL REELS** Maximum Temperature 210° F (99° C)										
D8650 OMP	53 25	2250 155	3/8 10	.690 21	1/2	1/2	50 15	D8600 OMP	41 19	3000 207
D8840 OMP	53 25	2000 138	1/2 13	.815 21	1/2	1/2	40 13	D8800 OMP	41 19	3000 207
D8850 OMP	56 26	2000 138	1/2 13	.815 21	1/2	1/2	50 15	D8800 OMP	41 19	3000 207
HIGH PRESSURE GREASE REELS*** Maximum Temperature 210° F (99° C)										
D8450 OHP	54 25	5000 345	1/4 6	.593 15	1/4	1/2	50 15	D8400 OHP	41 19	5000 345
D8650 OHP	60 28	4000 276	3/8 10	.750 19	1/4	1/2	50 15	D8600 OHP	41 19	5000 345

GOODYEAR RUBBER PRODUCTS INC.
Call Toll Free: 1-866-711-4673
WebSales@GoodyearRubberProducts.com
We Ship World Wide

DUAL PEDESTAL REELS
Series 80000 and D80000

Spring Driven Air/Water/Oil/Grease
Series 80000 & D80000 - 3/8", 1/2", 3/4", 1" I.D.

Reelcraft's Series 80000 and D80000 OLP spring retractable reels incorporate the most current design and manufacturing techniques to guarantee long life and trouble-free performance. All-steel construction and a baked-on powder coat finish combine to produce a rugged corrosion resistant product suitable for a wide variety of heavy duty applications. Series D80000 reels are also supplied with Reelcraft's new ball-bearing style swivel.

82100 OLP

Compact Base

Fits in areas where space is limited

FEATURES

- ✓ Hose anti-latch out feature ensures hose retracts every time.
- ✓ Guide arm is field adjustable for wall, ceiling, or truck mounting positions.
- ✓ Dual pedestal base and guide arm design, structurally reinforced.
- ✓ Five-in-one heat treated aluminium casting incorporates main shaft, ratchet, spring arbor and inlet/outlet plumbing in one piece casting.
- ✓ Containerized spring assembly. Provides safe and easy handling during maintenance.
- ✓ Two sealed ball bearings for smooth rotation of main shaft.

Made in USA

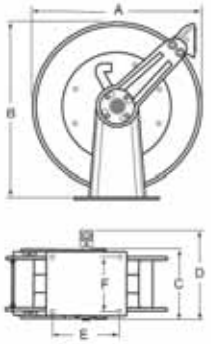

DIMENSIONS	D80000		80000	
	hose	in / mm	in / mm	
A		24 610	24	610
B		25.375 645	25.375	645
C		11.375 289	8.3125	211
D	¾"	14.25 362	10.5	267
	1"	15.25 387		
E		10.5 267	10	254
F		7.875 199	6	152

Inlet is 1/2" or 3/4" NPTF (F) or 3/4" BSPT. Reel outlet is 1/2" or 3/4" NPTF (F) or 3/4" BSPT. Four 1/2" (12.7mm) diameter mounting holes

MODELS WITH HOSE			HOSE CAPACITY					MODELS WITHOUT HOSE		
MODEL	WEIGHT	PRESSURE	I.D.	O.D.	(M)NPTF OUTLET	(F)NPTF INLET	LENGTH	MODEL	WEIGHT	PRESSURE
	lbs / kg	psi / bar	in / mm	in / mm	in	in	ft / m		lbs / kg	psi / bar
LOW PRESSURE AIR/WATER REELS Maximum Temperature 150° F (65° C) w/hose / 210° F (99° C) w/o hose										
81100 OLP	92 42	300 21	3/8 10	.688 18	3/8	1/2	100 31	81000 OLP	77 35	500 35
82075 OLP	95 43	300 21	1/2 13	.845 22	1/2	1/2	75 23	82000 OLP	82 37	500 35
82100 OLP	101 46	300 21	1/2 13	.845 22	1/2	1/2	100 31	82000 OLP	82 37	500 35
83050 OLP	88 40	250 17	3/4 19	1.188 31	3/4	3/4	50 15	83000 OLP	74 34	500 35
+F83050 OLP*	89 41	50 3.5	3/4 19	1.188 31	3/4	3/4	50 15	F83000 OLP	74 34	500 35
D83075 OLP	112 51	250 17	3/4 19	1.188 31	3/4	3/4	75 23	D83000 OLP	89 40	500 35
D84050 OLP	110 50	250 17	1 25	1.500 38	1	1	50 15	D84000 OLP	77 35	500 35
MEDIUM PRESSURE OIL REELS Maximum Temperature 210° F (99° C)										
82075 OMP	101 45	2000 138	1/2 13	.815 21	1/2	1/2	75 23	82000 OMP	79 35	2000 138
83050 OMP	96 43	1250 86	3/4 19	1.188 31	3/4	3/4	50 15	83000 OMP	77 35	1500 103
HIGH PRESSURE GREASE REELS Maximum Temperature 210° F (99° C)										
81075 OHP	88 39	4000 275	3/8 10	.640 16	3/8	1/2	75 23	81000 OHP	92 42	5000 345
81100 OHP	127 58	4000 275	3/8 10	.640 16	3/8	1/2	100 31	81000 OHP	92 42	5000 345

+UL 330 and ULC approved hose, 250 psi minimum burst (17 Bar) / For all metric thread connections over 1/2" add the suffix number -70 to indicate BSPT threads - example 83050-OLP70

GOODYEAR RUBBER PRODUCTS INC.
Call Toll Free: 1-866-711-4673
WebSales@GoodyearRubberProducts.com
We Ship World Wide

REELCRAFT

Wind Things Up With Reelcraft™

MOBILE BASE REELS
Series E9000

Spring Driven Air/Water/Oil/Grease
Series E9000 - 1/2", 3/4", 1", 1 1/4", 1 1/2" I.D.

These mobile base reels offer the greatest amount of stability for high volume air, water, fuel and petroleum. Ideal for portable service trucks, permanent service or plant work areas. A durable baked-on powder coat finish produces a rugged corrosion resistant product suitable for a wide variety of heavy duty applications. Basic reels without hose will handle air, water or oil; consult Reelcraft for other applications.

E9350 OLPBW

Made in USA

Hose Guide Roller Position

A suffix code (see diagram) must be added after the model # to specify desired position. Reels are shipped in the BW position unless specified otherwise. FF 95/9600 in BW only.

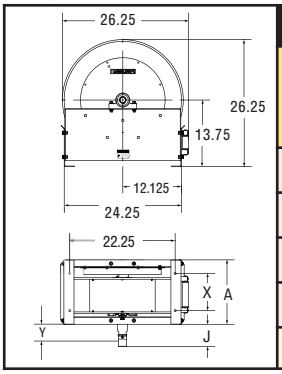

DIMENSIONS

	E9000		FE9000		FF9000		D9000		D9399 D9305	
	in	mm	in	mm	in	mm	in	mm	in	mm
J	3.75	95.3	7	178	7.75	197	7.75	197	7.75	197
A	12	305	12	305	17.8	451	12	305	13.3	337
X	7.75	197	7.75	197	13.5	343	7.75	197	7.75	197
Y	2.75	69.9	7.5	191	7.5	191	7.5	191	7.5	191

Four 7/16" (11.2mm) diameter mounting holes.

MODELS WITH HOSE			HOSE CAPACITY					MODELS WITHOUT HOSE		
MODEL	WEIGHT	PRESSURE	I.D.	O.D.	(M)NPTF OUTLET	(F)NPTF INLET	LENGTH	MODEL	WEIGHT	PRESSURE
	lbs / kg	psi / bar	in / mm	in / mm	in	in	ft / m		lbs / kg	psi / bar
LOW PRESSURE AIR/WATER REELS* Maximum Temperature 150° F (65° C)										
E9299 OLP	127 58	300 21	1/2 13	.844 22	1/2	1/2	100 31	E9200 OLP	115 52	500 35
E9350 OLP	140 64	250 18	3/4 19	1.188 31	3/4	3/4	50 15	E9300 OLP	115 52	500 35
FE9350 OLP §	140 64	50 3.5	3/4 19	1.188 31	3/4	3/4	50 15	FE9300 OLP	115 52	500 35
E9375 OLP	152 69	250 18	3/4 19	1.188 31	3/4	3/4	75 23	E9300 OLP	115 52	500 35
NEW D9399 OLPBW	143 65	250 18	3/4 19	1.188 31	3/4	3/4	100 31	D9305 OLPBW	113 51	500 35
E9450 OLP	157 72	250 18	1 25	1.500 31	3/4	1	50 15	E9400 OLP	115 52	500 35
FE9450 OLP §	157 72	50 3.5	1 25	1.500 31	3/4	1	50 15	FE9400 OLP	115 52	500 35
NOT AVAILABLE WITH HOSE			1 1/4 32	1.750 45	1 1/4	1 1/2	50 15	FF9500 OLPBW	125 57	300 35
NOT AVAILABLE WITH HOSE			1 1/2 38	2.000 51	1 1/2	1 1/2	50 15	FF9600 OLPBW	125 57	300 35
MEDIUM PRESSURE OIL REELS** Maximum Temperature 210° F (99° C)										
E9275 OMP	131 60	2000 138	1/2 13	.815 22	1/2	1/2	75 23	E9200 OMP	117 52	3000 207
E9350 OMP	142 65	1250 86	3/4 19	1.188 31	3/4	3/4	50 15	E9300 OMP	117 52	3000 207
HIGH PRESSURE GREASE REELS*** Maximum Temperature 210° F (99° C)										
E9175 OHP	153 70	4000 276	3/8 10	.750 22	1/2	3/8	75 23	E9100 OHP	118 54	5000 345

§ Models equipped with fuel grade hose. UL330 and VLC approved hose. 250 PSI minimum burst (17 Bar) *Low pressure reels furnished standard with PVC hose. / **Medium pressure reels are furnished standard with S.A.E. 100 R1T one wire braid hose. ***High pressure reels furnished standard with SAE 100R2T two wire braid hose suitable for grease applications only. For all

GOODYEAR RUBBER PRODUCTS INC.
Call Toll Free: 1-866-711-4673
WebSales@GoodyearRubberProducts.com
We Ship World Wide

TWIN HYDRAULIC SERVICE
Series TH

Spring Driven Twin Hose
Series TH - 1/4", 3/8", 1/2" I.D.

The hydraulic series reel incorporates contemporary engineering and manufacturing techniques to give trouble free performance. Used for medium pressure hydraulic applications, Series TH reels are ideal for operating hydraulic cylinders, tools and equipment. They have a high volume dual-body swivel for maximum product delivery (excluding the 80000). Reels are all steel construction and compact for applications with critical space requirements.

TH7445 OMP

Made in USA

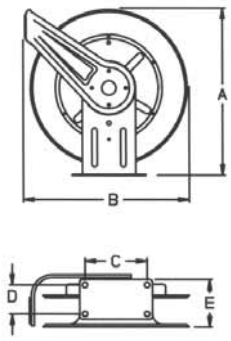

DIMENSIONS

	TH 5000 OMP		TH 7000 OMP		TH 80000 OMP	
	in	mm	in	mm	in	mm
A	14.5	368	20.25	514	25.375	645
B	13.5	343	19	483	24	610
C	9.75	248	7.875	200	10	254
D	2.5	64	3.875	98	6	152
E	6	152	7	177	13	330

C and D dimensions are mounting hole patterns. Four 5/16" (8mm) diameter mounting holes for the 5000 O. Four 1/2" (12.7mm) diameter mounting holes for the 7000 O and 80000.

FEATURES
- ✓ Constant tension or pos-i-latch spool mechanism
- ✓ All steel construction
- ✓ Reels have a durable, abrasion resistant baked-on powder coat finish spring motor
- ✓ Compact design for critical space requirements

Questions?
We can help!

Our friendly customer service team is ready to help you with expert assistance. When you call us, you get a live voice and fast, friendly service.

APPLICATIONS
- Cranes
- Construction Equipment
- Hydraulic Tools
- Vehicle Extraction Tools
- Aerial Device
- Hydraulic Cylinders
- Tree Cutters
- Digger Derricks
- Railroad Maintenance Tools

MODELS WITH HOSE			HOSE CAPACITY					MODELS WITHOUT HOSE		
MODEL	WEIGHT	PRESSURE	I.D.	O.D.	(M)NPTF OUTLET	(F)NPTF INLET	LENGTH	MODEL	WEIGHT	PRESSURE
	lbs / kg	psi / bar	in / mm	in / mm	in	in	ft / m		lbs / kg	psi / bar
MEDIUM PRESSURE HYDRAULIC HOSE REELS Maximum Temperature 210° F (99° C)										
TH5425 OMP	34 15	2000 138	1/4 6	.500 13	1/4	1/4	25 8	TH5400 OMP	24 10	3000 207
TH7445 OMP	67 30	2000 138	1/4 6	.500 13	1/4	1/4	45 15	TH7400 OMP	47 22	3000 207
THA7630 OMP	60 27	2000 138	3/8 10	.640 16	3/8	3/8	30 9	THA7600 OMP CA	47 22	3000 207
MEDIUM PRESSURE HOSE REELS - Maximum Temperature 210° F (99° C)										
TH86050 OMP	99 45	2000 138	3/8 10	.640 16	3/8	3/8	50 15	TH86000 OMP	87 39	3000 207
TH88050 OMP	104 47	2000 138	1/2 13	.910 23	1/2	1/2	50 15	TH88000 OMP CA	87 39	3000 207

GOODYEAR RUBBER PRODUCTS INC.
Call Toll Free: 1-866-711-4673
WebSales@GoodyearRubberProducts.com
We Ship World Wide

REELCRAFT
Wind Things Up With Reelcraft™

FUEL REELS
Series F7000 / FE9000 / FD9000 / FF9000 / F80000 / FD80000

Ultra Heavy Duty

Truck and Mobile Mount

FE9450 OLPBW

Spring Driven Fuel Reels

Series F7000 - 3/4" I.D.
Series FE9000 - 3/4", 1" I.D.
Series FF 9500, FF9600 - 1¼", 1½" I.D.
Series F80000 - 3/4" I.D.
Series FD80000 - 3/4", 1" I.D.

Reelcraft's fuel spring retractable reels, equipped with Viton® seals, are ideal for delivering fuel. The reels incorporate metal forms to insure the greatest possible strength and function equally well in both mobile and permanent mount applications. These rugged, corrosion-resistant reels are suitable for a wide variety of applications.

Made in USA

NEW SWIVEL FEATURES

- ✓ Ball-bearing design reduces load and minimizes wear
- ✓ Full flow design minimizes pressure drop
- ✓ Nickel plated for additional corrosion resistance

ADDITIONAL FEATURES (80000 Series)

- ✓ Five-in-one aluminum casting
- ✓ Containerized spring assembly
- ✓ Hose anti-latch out feature
- ✓ Two sealed ball bearings for smooth rotation of main shaft
- ✓ Dual pedestal and dual guide arm support

For fuel reel models #s
See chart on page 15

Heavy Duty

Single Pedestal Medium Capacity

F7925 OLP

High Capacity

Heavy Duty Dual Pedestal

FD83075 OLP

APPLICATIONS

- Industrial
- Automotive Service Centers
- Mining (above ground)
- Fleet Maintenance Facilities
- Agriculture
- Farm and Ranch
- Service Trucks
- Fluid Transfer

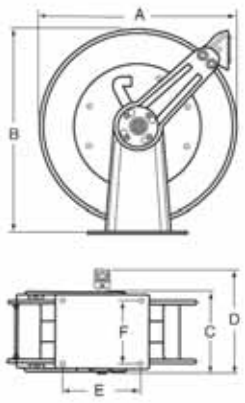

DIMENSIONS

	FD80000 hose	in / mm	
A		24	610
B		25.375	645
C		11.375	289
D	3/4"	14.25	362
	1"	15.25	387
E		10.5	267
F		7.875	199

Inlet is 3/4" or 1" NPTF (F) and matches hose ID.
Outlet is 3/4" or 1" NPTF (F) and matches hose ID.
Four 1/2" (12.7mm) diameter mounting holes

NOTE: For reel dimensions not listed on this page, please

GOODYEAR RUBBER PRODUCTS INC.
Call Toll Free: 1-866-711-4673
WebSales@GoodyearRubberProducts.com
We Ship World Wide

STATIC DISCHARGE REELS
Series G

DIMENSIONS
G 3000 SERIES

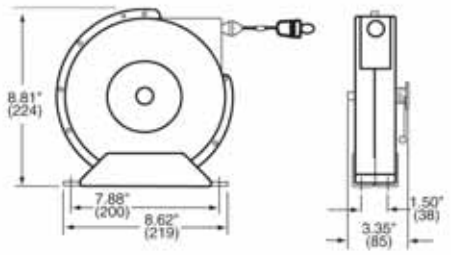

Four $^{3}/_{8}$" (10mm) diameter mounting holes

NOTE: Dimensions for GA3100 N are 9.25" x 4.31" x 9.75" (LxWxH)

GA3100 N
100' Cable

G 3050 Y
50' Cable

G 3050
50' Cable

Cable Included

SPECIFICATIONS Includes cable installed on reel

MODEL	CABLE EXTENDED ft / m	Y ft / m	CABLE NOTES	WEIGHT lbs / kg
G 3050	50 15	N/A	Single 7 x 7 stranded steel*	12 5.5
G 3050 Y	50 15	2 @ 15' (4.8)	35' (9.2m) plus dual 15' (4.6m) for 'Y'* Total extension 50' (15m)	12 5.5
G 3050 N	50 15	N/A	Nylon covered cable**	12 5.5
GA3100 N	100 30	N/A	Hi-vis orange nylon covered cable**	22 10

* Static discharge reels are supplied complete with 3/32" OD steel aircraft cable. DC resistance is approximately one ohm per 50 ft. of steel cable.

** Nylon covered cable (1/8" O.D.). NOTE: Dimensions for GA3100 N are 9.25" x 4.31" x 9 3/4" (LxWxH)

Spring Driven
Series G 3000

Static discharge reels are used to ground equipment operating in hazardous atmospheres, such as fuel trucks or carts transferring flammable materials. When properly clamped to ground, the static discharge reel dissipates static electrical buildup, reducing the chances of sparking and the potential for explosion.

F7925 OLP FD83075 OLP FE9450 OLPBW

Fuel reels
Continued from page 14

Additional Fuel Reel Information

MODELS WITH HOSE			HOSE CAPACITY					MODELS WITHOUT HOSE		
MODEL	WEIGHT lbs / kg	PRESSURE psi / bar	I.D. in / mm	O.D. in / mm	(M)NPTF OUTLET in	(F)NPTF INLET in	LENGTH ft / m	MODEL	WEIGHT lbs / kg	PRESSURE psi / bar
LOW PRESSURE FUEL REELS Maximum Temperature 150° F (65° C) w/hose / 210° F (99° C) w/o hose										
F7925 OLP*	53 24	*50 3.5	¾ 19	1.188 31	3/4	3/4	25 8	F7900 OLP	45 21	500 35
F83050 OLP*	89 41	*50 3.5	¾ 19	1.188 31	3/4	3/4	50 15	F83000 OLP	74 33	500 35
FD83075 OLP*	130 58	*50 3.5	¾ 19	1.188 31	3/4	3/4	75 23	FD83000 OLP	77 34	500 35
FD84050 OLP*	120 54	*50 3.5	1 25	1.500 38	1	1	50 15	FD84000 OLP	78 35	500 35
FE9350 OLP*	140 64	*50 3.5	¾ 19	1.188 31	3/4	3/4	50 15	FE9300 OLP	115 53	500 35
FE9450 OLP*	157 72	*50 3.5	1 25	1.500 38	1	1	50 15	FE9400 OLP	115 53	500 35
FD9350 OLP*	140 64	*50 3.5	¾ 19	1.188 31	3/4	3/4	50 15	FD9300 OLP	115 53	500 35
FD9450 OLP*	157 72	*50 3.5	1 25	1.500 38	1	1	50 15	FD9400 OLP	115 53	500 35
Models not available with hose			1¼ 32	1.750 45	1 1/4	1 1/4	50 15	FF9500 OLPBW	125 57	300 21
			1½ 39	2.000 51	1 1/2	1 1/2	50 15	FF9600 OLPBW	125 57	300 21

*** Models equipped with fuel grade hose. UL330 and ULC approved hose. 250 PSI minimum burst (17 Bar)**

GOODYEAR RUBBER PRODUCTS INC.
Call Toll Free: 1-866-711-4673
WebSales@GoodyearRubberProducts.com
We Ship World Wide

CORROSION RESISTANT
Stainless Steel Series

APPLICATIONS

- Restaurants
- Car Washes
- Laboratories
- Dairies
- Marinas
- Grocery Stores
- Photo Finishing
- Meat Packing Plants
- Chemical Plants
- Printing Industry
- Pharmaceutical
- Food Processing
- Ships

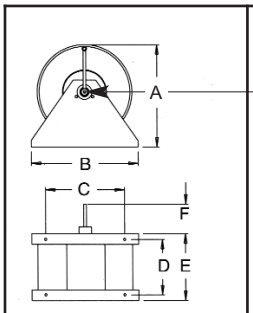

HS18000M
Four 7/16 inch (11.2mm) diameter mounting holes

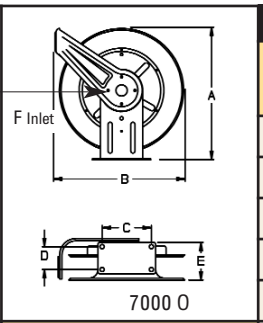

7000 O

HOSE REEL INLET

DIMENSIONS

	5000 O		7000 O		80000		D80000		HS18000 M	
	in	mm	in	mm	in	mm	in	mm	in	mm
A	14.5	368	20.25	514	25.375	645	25.375	645	19	483
B	13.75	348	19	483	24	610	24.125	613	20	508
C	9.75	248	7.875	200	10	254	10.5	267	15	381
D	2.5	64	3.875	98	6	153	7.875	199	10	253
E	6	152	7	178	10.5	267	14.25	362	16.25	413
F	3/8" NPTF (F)		1/2" NPTF (F)		1/2" NPTF (F) 3/4" NPTF (F)		3/4" NPTF (F) 1" NPTF (F)		1/2" NPTF (F)	

Series 5000 has four 5/16" (8mm) diameter mounting holes. Series 7000, 80000 and D80000 has four 1/2" (13mm) diameter mounting holes.
Series HS 18000 has four 7/16" (11mm) diameter mounting holes. Series 80000 and D80000 inlet matches recommended hose I.D.
NOTE: For D9000 dimensions see chart on page 12 -- refer to E9000 dimensions.

MODELS WITHOUT HOSE — HOSE CAPACITY

MODEL	WEIGHT	PRESSURE	I.D.	O.D.	(F)NPTF INLET	LENGTH
	lbs / kg	psi / bar	in / mm	in / mm	in	ft / m
MEDIUM and LOW PRESSURE REELS						
CA 5600 OLS	23 10	500 35	3/8 10	.690 18	3/8	35 11
5600 OMS	24 10	3000 207	3/8 10	.690 18	3/8	30 10
QS 7800 OLS	44 20	500 35	1/2 13	.781 20	1/2	50 15
7600 OMS55	42 19	3000 207	3/8 10	.690 18	3/8	66 20
CA 7800 OMS	47 21	3000 207	1/2 13	.820 21	1/2	50 15
D9200 OLS	115 52	500 35	1/2 13	.781 20	1/2	100 31
D9300 OLS	116 53	500 35	3/4 19	1.188 30	3/4	75 22
D9400 OLS	117 53	500 35	1 25	1.500 38	1	50 15
D9200 OMS	118 54	3000 207	1/2 13	.820 21	1/2	100 31
D9300 OMS	118 54	3000 207	3/4 19	1.188 30	3/4	75 22
82000 OLS	81 36	500 35	1/2 13	.781 20	1/2	100 31
82000 OMS	83 37	1500 104	1/2 13	.820 21	1/2	75 22
83000 OLS	81 36	500 35	3/4 19	1.188 30	3/4	50 15
83000 OMS	83 37	1250 86	3/4 19	1.188 30	3/4	50 15
D83000 OLS	76 34	500 35	3/4 19	1.188 30	3/4	75 22
D84000 OLS	77 35	500 35	1 25	1.500 38	1	50 15
MANUAL CRANK MEDIUM PRESSURE REELS						
CA HS18000 M	37 16	3000 207	See chart at right		1/2	See chart at right
HS28000 M	35 16	3000 207			1/2	
CA HS19000 M	42 19	3000 207			3/4	

ADDITIONAL INFORMATION

Reels not cataloged with hose. Hoses are quoted separately on request.

Maximum temperature 210° F (99° C)

Consult manufacturer for higher temperature.

For all metric thread connections over 1/2" add the suffix number 70 to indicate BSPT threads - example D83000 OLS70

MAXIMUM HOSE CAPACITY

I.D.	¼ 6	3/8 10	½ 13	¾ 19	1 25
O.D.	.530 14	.688 18	.845 22	1.188 30	1.500 38
HOSE LENGTH					
	425 129	300 91	200 61	— —	— —
	625 190	450 137	300 91	— —	— —
	425 129	300 91	200 61	75 22	— —

GOODYEAR RUBBER PRODUCTS INC.
Call Toll Free: 1-866-711-4673
WebSales@GoodyearRubberProducts.com
We Ship World Wide

CORROSION RESISTANT
Stainless Steel Series

Spring Driven Air/Water/Oil
Stainless Steel Series - 3/8", 1/2", 3/4", 1" I.D.

Reelcraft's stainless steel hose reels will increase the life of expensive chemical fluid transfer and wash down hoses. By properly storing hose when not in use, occupational safety will improve by eliminating the tripping hazard of unstored hose and sanitation will improve.

Stainless steel hose reels are ideal for food processing, pre-rinse, wash down, chemical transfer and industrial solvent handling. Also suitable for coastal, offshore and on-board ship in marine applications where the harsh environment of salt water spray requires the use of stainless steel hose reels. Swivels include Viton® "O" rings.

Made in USA

Compact
Great for areas where space is critical

5000 SERIES

HS18000 M

General Use
Many versatile applications in corrosive or sanitary environments

7000 SERIES

80000 SERIES

Heavy Duty

Ultra Heavy Duty

Heavy duty dual pedestal for maximum strength

FEATURES

- ✓ Full-flow stainless steel shaft and swivel assures maximum product delivery. **Exception:** Series 80000- aluminum fluid path.
- ✓ Heavy duty brackets eliminate bending due to angular hose pull.
- ✓ Banded drive spring gives smooth automatic hose retrieval.
- ✓ Multi-position guide arm permits wall, floor, ceiling, pit or truck mounting.
- ✓ Nylon guide rollers reduce hose drag and abrasion.
- ✓ Pos-i-latch will maintain the desired working length of hose. Mechanism assures a positive latch of the hose.
- ✓ All reels are permanently factory lubricated.
- ✓ 7000 Series offers weatherproof gasketed spring motor, assures maximum service life.
- ✓ Vibration-proof self-locking fasteners assures assembly integrity.
- ✓ 304L grade of stainless steel.
- ✓ Passivated for electro polish finish.

*Series 80000 and D80000 stainless reels have an aluminum fluid path and may not be suitable for all applications.

GOODYEAR RUBBER PRODUCTS INC.
Call Toll Free: 1-866-711-4673
WebSales@GoodyearRubberProducts.com
We Ship World Wide

REELCRAFT
Wind Things Up With Reelcraft™

PRE-RINSE AND POTABLE WATER Series 4000 & 5000

5635 OLPSW5

Optional 360° Swivel 600248

Spray Valve 600080

Hot water washdown and food prep

Commercial use, restaurants, schools, home/garden and more

5835 OLBSW23

Drinking Water

Boats, RVs, buses and much more

UL LISTED

Spring Driven
Potable (Drinking) Water Reel - 1/2" I.D.

Our potable water reel is classified 7P20 by Underwriters Laboratories as a "Drinking Water System Component" in accordance with ANSI/NSF Standard 61.

ANSI: American National Standards Institute
NSF: National Sanitation Foundation

Made in USA

POTABLE WATER REEL FEATURES

- ✓ Stainless steel, full flow shaft and swivel
- ✓ Convenient fast hook-up and disconnect
- ✓ Drain and standard female garden hose inlet fitting are standard
- ✓ Maximum operating temperature 86° F (30°C)

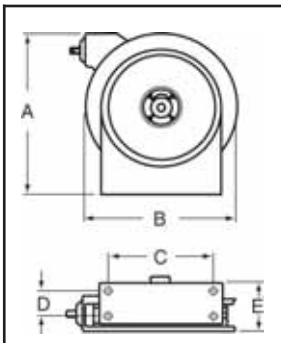

DIMENSIONS

	4000 0		5000 0		5000 E	
	in	mm	in	mm	in	mm
A	12.875	327	14.5	368	18.5	381
B	12.625	321	13.5	349	15	470
C	8	203	9.75	248	9.75	248
D	2.5	64	2.5	64	2.5	64
E	5.375	136	6	153	7	178

Four 5/16" (8mm) diameter mounting holes.

Spring Driven
Pre-Rinse Reels - 3/8" I.D.

Crafted for use in corrosion-resistant appliances of restaurants, institutions, home and garden applications, Reelcraft's pre-rinse reels include a standard lever-operated spray valve and stainless steel spring hose guard. Available in stainless or powder finish. Rated for hot water up to 210° F (99° C).

PRE-RINSE REEL FEATURES

- ✓ Lever-operated spray valve and stainless steel hose guard are included
- ✓ Optional 360° rotating swivel (600248) offers 20 degrees of angular motion
- ✓ Push-Lok, field replaceable, hose-end fittings
- ✓ Reels can be mounted on the wall, ceiling, or under a counter, making water conveniently available
- ✓ Latching mechanism hold hoses at desired length

SPECIFICATIONS

MODEL	I.D.		O.D.		(F)NPTF INLET	LENGTH		WEIGHT		PRESSURE	
	in	mm	in	mm	in	ft	m	lbs	kg	psi	bar
PRE-RINSE REELS											
4625 OLPSW5	3/8	10	.640	16	3/8	25	8	24	11	250	18
5635 OLPSW5	3/8	10	.640	16	3/8	35	11	30	14	250	18
5635 ELPSW5	3/8	10	.640	16	3/8	35	11	39	17	250	18
PRE-RINSE STAINLESS STEEL REELS											
5635 OLSSW5	3/8	10	.640	16	3/8	35	11	29	13	250	18
5635 ELSSW5	3/8	10	.640	16	3/8	35	11	39	17	250	18
POTABLE (Drinking) WATER REELS OUTLET - Garden Hose Fitting 3/4" N/H Threads (F)											

GOODYEAR RUBBER PRODUCTS INC.
Call Toll Free: 1-866-711-4673
WebSales@GoodyearRubberProducts.com
We Ship World Wide

Spring Driven Composite Reels

S Series - 3/8", 1/2" I.D. & Welding Reels

The S Series is economical, durable and lightweight utilizing a practical combination of the latest composite materials and metals with applications including water, air, hot wash (pre-rinse), chemical delivery and oxygen acetylene.

A unique combination of composites & metals

The tough composite poly-propylene outer case houses solid brass swivel and fluid path, a steel main shaft and high quality spring steel motor.

Corrosion-resistant & durable

The tough composite poly-propylene outer case is UV stabilized and resistant to most acids and alkalis with excellent impact resistance making these reels suitable not only for general applications but also for environments where corrosion is an issue.

Positive latching system

The design of the latching system ensures positive latching in any mounting position.

Unique mounting

The mounting bracket system supplied with the reel allows for mounting in any position with the advantage of the swivel feature standard.

Lighter Weight

Pound for pound the S series offers distinct weight advantages due to the composite case construction.

Arbor Farms Nursery, Fort Wayne, Indiana

SGA3650 OLP

SGA3650 OLP

Shown with mounting brackets and optional wire stand #S261398

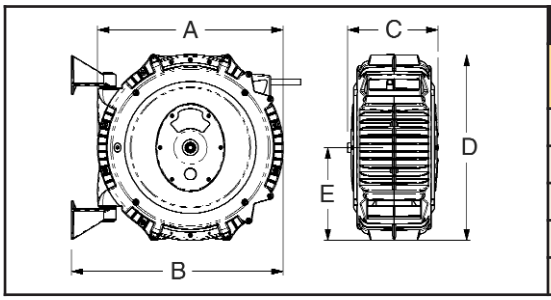

DIMENSIONS	S SERIES in / mm
A	19.25 490
B	22.75 580
C	9.5 240
D	19 483
E	9.5 245

Composite / S Series

- ✓ Combination Air/Water
- ✓ Water Service
- ✓ Hot Water Wash
- ✓ Chemical Delivery
- ✓ Oxygen Acetylene

SPECIFICATIONS

MODEL (with hose)	WEIGHT lbs / kg	PRESSURE psi / bar	I.D. in / mm	O.D. in / mm	LENGTH ft / m	(M)NPTF HOSE OUTLET in	(F)NPTF REEL INLET in
AIR* & WATER* REELS Working Temperature 150° F (65° C).							
SGA3650 OLP	23 10	232 16	3/8 10	.621 16	50 15	3/8	3/8
SGA3665 OLP	27 12	232 16	3/8 10	.621 16	66 20	3/8	3/8
SGA3850 OLP	27 12	232 16	1/2 13	.781 20	50 15	1/2	1/2
WATER REEL Garden-style hose end. Working Temperature 150° F (65° C).							
SWA3850 OLP	27 12	145 10	1/2 13	.750 19	50 15	3/4 NH	1/2
HOT WATER WASH REEL NOTE: Working Temperature 185° F (85° C). Working pressure is related to working temperature.							
SHA3850 OLP	27 12	232 16	1/2 13	.781 20	50 15	1/2	1/2
CHEMICAL DELIVERY REEL							
SCA3850 OLP	27 12	232 16	1/2 13	.781 20	50 15	1/2	1/2
OXYGEN/ACETYLENE REEL Working Temperature 150° F (65° C).							

NEW

Suitable for all position mounting.

Series S reels are

GOODYEAR RUBBER PRODUCTS INC.
Call Toll Free: 1-866-711-4673
WebSales@GoodyearRubberProducts.com
We Ship World Wide

REELCRAFT
Wind Things Up With Reelcraft™

PRESSURE WASH REELS
Series 30000 / H18006 / PW

PW7650 OHP

Spring Driven, Hand Crank and Motor Driven
Series 30000 / H18006 / PW - 1/4", 3/8", 1/2" I.D.

Compact design and quality steel construction are incorporated into Reelcraft's newest line of pressure wash reels rated up to 4500 PSI. The Series 30000, H18006 and PW reels are able to carry 50 to 400 feet of tangle-free hose and come complete with Super Swivel® for maximum product delivery. Super Swivel® is designed to handle a broad range of pressures, temperatures and chemicals; perfect for agricultural/marine, equipment cleaning and pressure washing applications.

APPLICATIONS
- Agricultural
- Marine
- Equipment Cleaning
- Pressure washing

CA38106 M

H and 30000

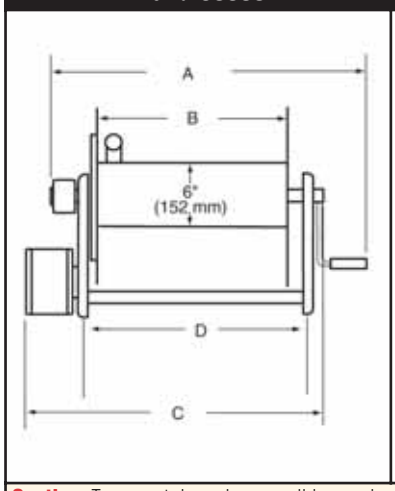

PW

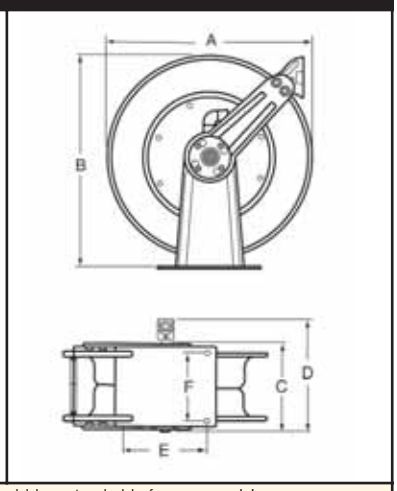

Caution: To prevent drum damage, all hoses should be extended before pressurizing.

Made in USA

HOSE CAPACITY AND REEL DIMENSIONS

	CAPACITY																			
	ft	m	ft	m	ft	m														
Hose I.D.	1/4	6	3/8	10	1/2	13														
Hose O.D.	.530	14	.688	18	.845	22														
MODEL	LENGTH						WEIGHT		DIMENSIONS											
									A		B		C		D		E		F	
	ft	m	ft	m	ft	m	lbs	kg	in	mm	in	mm	in	mm	in	mm	in	mm	in	mm
Spring Driven - Pressure 4500 psi / 345 bar (*hose included - Maximum Temperature 212°F (100°C)) Maximum Temperature 400°F (200°C)																				
NEW PW7600 OHP	—	—	50	15	—	—	46	21	19	483	20.25	521	7	178	7	178	7.875	200	3.875	98
PW7650 OHP*	—	—	50	15	—	—	50	23	19	483	20.25	521	7	178	7	178	7.875	200	3.875	98
PW81000 OHP	—	—	100	31	—	—	81	37	24	610	25.375	645	8.3125	211	10.5	267	10	254	6	153
Hand Crank - Pressure 3000 psi / 207 bar; Maximum Temperature 400°F (200°C)																				
H18006 M	150	46	100	31	—	—	34	16	18	457	14	356	10	254	5.5	140	7.75	197	5.5	140
CA38106 M	200	61	140	43	100	31	44	20	19	483	6	153	—	—	9.75	248	9	229	—	—
CA38112 M	425	130	300	91	200	61	49	23	25	635	12	305	—	—	15.75	400	9	229	—	—
Electric Motor Driven - Pressure 3000 psi / 207 bar; Maximum Temperature 400°F (200°C)																				

GOODYEAR RUBBER PRODUCTS INC.
Call Toll Free: 1-866-711-4673
WebSales@GoodyearRubberProducts.com
We Ship World Wide

GENERAL USE HAND CRANK
Series CU and H

Hand Crank Air/Water
Series CU - 3/8" I.D.

NEW!

The Series CU is designed for lighter-duty applications that require longer lengths of low pressure air/water hose. These reels are hand crank with a balanced brass swivel and brass inlet. The product of lighter weight components and forward-thinking design, the Series CU is an economical choice for storing and retrieving hose.

CU6100LN

SPECIFICATIONS

MODEL	HOSE I.D.	(M)NPTF OUTLET	(F)NPTF INLET	LENGTH	WEIGHT	PRESSURE
	in / mm	in	in	ft / m	lbs / kg	psi / bar
LOW PRESSURE AIR/WATER REELS : Maximum Temperature 150°F (65°C)						
CU6050LN	3/8 10	3/8	3/8	50 15	10 4.5	250 18
CU6100LN	3/8 10	3/8	3/8	100 31	13 6	250 18

Reels are supplied w/o hose; assemblies will be quoted upon request.

NEW!

CU6050LN

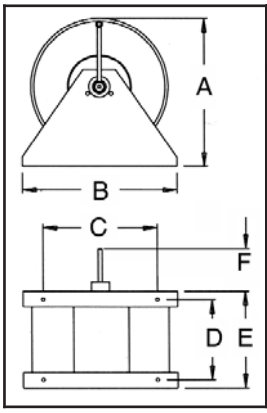

DIMENSIONS

	H16000 H18000 H19000	H28000 H29000	H28005 H29005	CU6050LN	CU6100LN
	in / mm	in / mm	in / mm	in / mm	in / mm
A	19 483	19 483	20.125 512	11.5 296	11.5 296
B	20 508	20 508	14 356	11 280	11 280
C	15 381	15 381	10 254	2 49	2 49
D	10 254	16 407	16 407	6 150	10.5 267
E	12.5 318	18.5 470	18.5 470	11.25 286	15.625 397
F	5.75 146	5.75 146	5.75 146	5.5 140	5.5 140

Hand Crank Air/Water/Oil/Grease
Series H - 3/8", 1/2", 3/4" I.D.

An economical reel designed for medium duty applications requiring long lengths of hose. Equally suited for plant or field use such as lawn care, pest control, steam cleaning and more. Shipped completely assembled, ready to install.

SPECIFICATIONS

MODEL	HOSE I.D.	HOSE O.D.	(F)NPTF INLET	LENGTH	WEIGHT	PRESSURE
	in / mm	in / mm	in	ft / m	lbs / kg	psi / bar
LOW PRESSURE AIR/WATER REELS : Maximum Temperature 150°F (65°C)						
H16000	3/8 10	.688 18	3/8	300 91	32 15	500 35
H18000 CA	1/2 13	.844 22	1/2	200 61	33 15	1000 69
H28005	1/2 13	.844 22	1/2	300 91	34 16	1000 69
H28000	1/2 13	.844 22	1/2	300 91	37 17	1000 69
H19000	3/4 19	1.118 31	3/4	100 30	33 15	1000 69
H29005	3/4 19	1.118 31	3/4	100 30	35 16	1000 69
H29000	3/4 19	1.118 31	3/4	150 46	41 19	1000 69
MEDIUM PRESSURE OIL REELS : Maximum Temperature 210°F (99°C)						
H16000 M	3/8 10	.690 18	3/8	300 91	32 15	3000 207
H18000 M CA	1/2 13	.815 21	1/2	200 61	35 16	3000 207
H19000 M CA	3/4 19	1.118 31	3/4	80 24	38 18	3000 207
H29000 M	3/4 19	1.118 31	3/4	125 38	35 16	3000 207
HIGH PRESSURE GREASE REELS : Maximum Temperature 210°F (99°C)						
H16000 H	3/8 10	.750 19	3/8	250 76	32 15	5000 345

GOODYEAR RUBBER PRODUCTS INC.
Call Toll Free: 1-866-711-4673
WebSales@GoodyearRubberProducts.com
We Ship World Wide

REELCRAFT

Wind Things Up With Reelcraft™

VERSATILE CONFIGURATIONS
Series 30000

Hand Crank

CA33112L

FEATURES

- ✓ Adjustable spool rotation drag that eliminates hose backlash
- ✓ Nickel-plated swivel with four "O" ring options: AFLAS (std), Buna, Viton® or -EPR* seals
- ✓ Full flow shaft and ball bearing swivel (excludes 1/2" models)
- ✓ Permanently lubricated dual main bearings

*Standard swivel

- ✓ Motor mounting at either end of reel
- ✓ All bolted construction - no welds
- ✓ Optional lock pin to prevent spool rotation when the reel is not in use S600874
- ✓ Temperature operating range from -20° F (-29° C) to +250° F (121°C)
- ✓ Vibration-proof self-locking fasteners to ensure assembly integrity

Note: Many more reel models available in addition to chart
Please call manufacturer for details on models not listed here

SPECIFICATIONS

MODEL	HOSE I.D.	HOSE O.D.	(F)NPTF REEL INLET	CAPACITY	WEIGHT	PRESSURE	A	B	C	D
	in / mm	in / mm	in	ft / m	lbs / kg	psi / bar	in / mm	in / mm	in / mm	in / mm
HAND CRANK										
CA32106 L QS	1/2 13	.845 21.5	1/2	100 31	42 19	1000 69	19 483	6 153	N/A	9.75 248
CA32112 L QS	1/2 13	.845 21.5	1/2	200 61	49 22	1000 69	25 635	12 305	N/A	15.75 400
CA32118 L CA	1/2 13	.845 21.5	1/2	325 99	56 25	1000 69	31 787	18 458	N/A	21.75 553
CA32122 L CA	1/2 13	.845 21.5	1/2	400 122	65 29	1000 69	35 889	22 559	N/A	25.75 654
CA32128 L	1/2 13	.845 21.5	1/2	500 153	69 31	1000 69	40 101	27 686	N/A	30.75 781
CA32106 M CA	1/2 13	.845 21.5	1/2	100 31	43 19	3000 207	19 483	6 153	N/A	9.75 248
CA32112 M QS	1/2 13	.845 21.5	1/2	200 61	49 22	3000 207	25 635	12 305	N/A	15.75 400
CA33106 L QS	3/4 19	1.188 30.2	3/4	50 16	43 20	1000 69	19 483	6 153	N/A	9.75 249
CA33112 L QS	3/4 19	1.188 30.2	3/4	100 31	42 19	1000 69	25 635	12 305	N/A	15.75 400
CA33118 L IN	3/4 19	1.188 30.2	3/4	175 54	56 25	1000 69	31 787	18 458	N/A	21.75 553
CA33112 M	3/4 19	1.188 30.2	3/4	100 31	53 24	3000 207	25 635	12 305	N/A	15.75 400
CA33118 M	3/4 19	1.188 30.2	3/4	175 54	54 25	3000 207	31 787	18 458	N/A	21.75 553
CA37118 L* QS	1 25	1.380 35.0	1	100 31	58 26	300 21	34 864	18 458	N/A	21.75 553
BEVEL CRANK REELS										
BA36112 L	1/4 7	Twin Welding	1/4	250 77	57 25	200 14	25 635	12 305	N/A	15.75 400
BA34112 M	1/2 13	Twin Hydraulic	1/2	100 31	54 24	3000 207	25 635	12 305	N/A	15.75 400
ELECTRIC MOTOR DRIVEN REELS										
EA32106 L10A	1/2 13	.845 21.5	1/2	100 31	74 33	1000 69	N/A	6 153	19.625 499	9.75 249
EA32112 L12D CA	1/2 13	.845 21.5	1/2	200 61	71 32	1000 69	N/A	12 305	23.6875 600	15.75 400
EA32118 L12D	1/2 13	.845 21.5	1/2	325 99	71 32	1000 69	N/A	18 458	29.625 753	21.75 553
EA33112 M12D	3/4 19	1.188 30.2	3/4	100 31	71 32	3000 207	N/A	12 305	23.625 600	15.75 400
EA33128 M12D	3/4 19	1.188 30.2	3/4	275 84	91 41	3000 207	N/A	27 686	38.625 982	30.75 781
EA33112 L12D IN	3/4 19	1.188 30.2	3/4	100 31	70 31	1000 69	N/A	12 305	23.625 600	15.75 400
EA33112 M24D	3/4 19	1.188 30.2	3/4	100 31	71 32	3000 207	N/A	12 305	23.625 600	15.75 400
EA37118 L12D*	1 25	1.380 35.0	1	100 31	75 34	300 21	N/A	18 458	31 787	21.75 553
AIR MOTOR DRIVEN REELS - Filter, regulator, lubricator required										
AA32112 L4A	1/2 13	.845 21.5	1/2	200 61	62 28	1000 69	N/A	12 305	23.25 591	15.75 400
AA33106 L4A	3/4 19	1.188 30.2	3/4	50 16	59 26	1000 69	N/A	6 153	17.25 439	9.75 249

GOODYEAR RUBBER PRODUCTS INC.
Call Toll Free: 1-866-711-4673
WebSales@GoodyearRubberProducts.com
We Ship World Wide

VERSATILE CONFIGURATIONS
Series 30000

DIMENSIONS & SPECS						
	HOSE I.D.	1/4" (6.35mm)	3/8" (9.53mm)	1/2" (12.70mm)	3/4" (19.05mm)	1" (25.40mm)
	HOSE O.D.	.530" (13.4mm)	.688" (17.5mm)	.854" (21.5mm)	1.188" (30.2mm)	1.380" (35.0mm)
"B" WIDTH	WEIGHT	HOSE CAPACITY				
6" (153 mm)	38 lb (18 kg)	200' (61 m)	140' (43 m)	100' (31 m)	50' (16 m)	N/A
12" (305 mm)	46 lb (21 kg)	425' (130 m)	300' (91 m)	200' (61 m)	100' (31 m)	N/A
18" (458 mm)	54 lb (25 kg)	625' (191 m)	450' (137 m)	325' (99 m)	175' (54 m)	100' (31 m)
22" (559 mm)	58 lb (27 kg)	780' (238 m)	550' (168 m)	400' (122 m)	225' (69 m)	125' (38 m)
27" (712 mm)	66 lb (30 kg)	1000' (305 m)	700' (213 m)	500' (153 m)	275' (84 m)	150' (47 m)

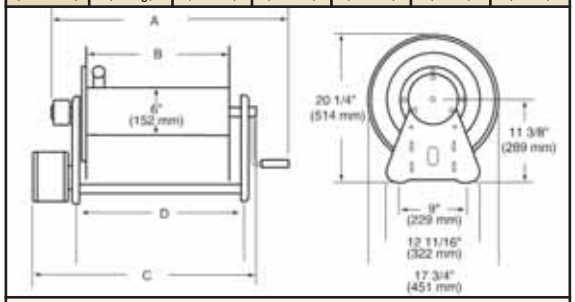

Four 1/2 inch (12.7mm) diameter mounting holes

Note: Weights listed are for crank driven - Add for power driven, electric - all explosion proof 45 lb. (20.41 kg); 12 Volt D.C. 1/3 H.P. 30 lb. (13.61 kg); Air 6 AM 36 lb. (16.33 kg). * Note: capacity chart is reference only.

For all metric thread connections over 1/2" add the suffix number 70 to indicate BSPT threads - example CA33112 M70.

Hand Crank and Motor Driven

Series 30000 - 1/4",1/2", 3/4", 1" I.D.

Reelcraft's Series 30000 reels are designed for rugged, heavy duty applications requiring long lengths of hose and large storage capacity. All-bolted unitized construction with no welds to fatigue. Full flow swivel and heavy gauge steel frame, spool and drum ensure longest service life.

Low pressure water

Long hose lengths ideal for grounds maintenance and more

Photo courtesy of DEMCO • Dethmers Manufacturing Company, Boyden, Iowa

Electric Motor

EA33112 L12D

CAUTION: To prevent drum damage, fully extend and pressurize hose, then wind on the reel. The 30000 series should always be wound under pressure.

Made in USA

MODEL NUMBER SIGNIFICANCE

EA 3 2 1 12 L 12 D X

Drive Type
- AA - Air, Pneumatic motor driven
- BA - Bevel crank - Front position
- CA - Hand crank direct drive
- EA - Electric driven, AC or DC
- HA - Hydraulic driven

Swivel Size
- 0 – No Swivel
- 2 – 1/2" (12mm) I.D.
- 3 – 3/4" (19mm) I.D.
- 4 – 1/2" (12mm) Dual
- 5 – 3/4" (19mm) Dual
- 6 – 1/4" (6.4mm) Dual
- 7 – 1" (25.4mm) I.D.
- 8 – 1/2" Pressure Wash

Width of Spool
- 06 - 6" (150mm) Width of spool
- 12- 12" (300mm) Width of spool
- 18- 18" (450mm) Width of spool
- 22- 22" (560mm) Width of spool
- 28- 27" (559 mm) Width of spool

Pressure Type
- L - 1000 PSI (69 bar)
- M - 3000 PSI (207 bar)

Power Source
- 12 – 12 Volt D.C.
- 24 – 24 Volt D.C.
- 10 – 115 Volt A.C.
- 4A – 1 1/2 hp (Air Motor)
- 6A – 4 hp (Air Motor)

Electric Current Type
- A – A.C.
- D – D.C.

Explosion Proof X
- Electric Motor only

NOTE:
This chart is for reference purposes only. Reels cannot be ordered by selecting from this chart. Please see selection charts or

GOODYEAR RUBBER PRODUCTS INC.
Call Toll Free: 1-866-711-4673
WebSales@GoodyearRubberProducts.com
We Ship World Wide

REELCRAFT
Wind Things Up With Reelcraft™

PORTABLE HOSE REEL & CART Series 37000

Hose Reel Cart Package **600968**

Orchard Ridge Country Club, Fort Wayne, Indiana

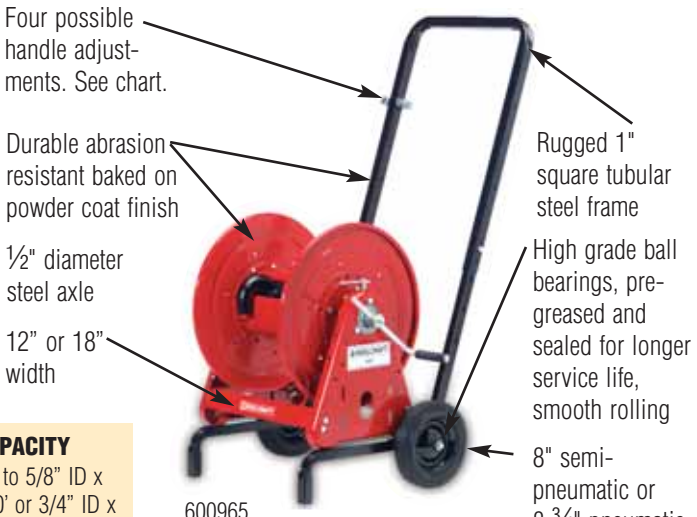

600965

CAPACITY
Up to 5/8" ID x 200' or 3/4" ID x 100' water hose

APPLICATIONS

- Grounds Maintenance
- Sports Turf/Athletic Fields
- Farm and Ranch
- Pressure Wash
- Golf Courses
- Pest Control
- Nurseries/Orchards
- Resorts/Hotels

CONVENIENT PACKAGES:

We've made it easy to select a complete hose reel with cart or trailer from the charts included on pages 24 and 25.

Made in USA

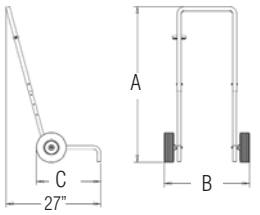

	CART SIZE			
	12	305	18	457
	in / mm		in / mm	
A	Adjustable*			
B	23.75	604	28.75	731
C	18.25	464	18.25	464

*Handle height of cart is adjustable to 35.625", 38.625", 41.5" or 44.5"
Eight 5/16" (8 mm) diameter mounting holes

HOSE REEL AND CART PACKAGES

PACKAGE	ITEMS INCLUDE:
600965	(1) CA32112 L : 12" hand crank hose reel with a 1/2" fluid path for 1/2" industrial water hose or 5/8" garden hose. 200 feet capacity. (1) 600741-1 : 12" hand cart with pneumatic tires. (1) 600962 : 10' inlet hose with female garden hose fitting and male garden hose fitting for the outlet of reel.
600966	(1) CA32112 L : 12" hand crank hose reel with a 1/2" fluid path for 1/2" industrial water hose or 5/8" garden hose. 200 feet capacity. (1) 600741-2 : 12" hand cart with semi-pneumatic tires. (1) 600962 : 10' inlet hose with female garden hose fitting and male garden hose fitting for the outlet of the reel.
600967	(1) CA33112 L : 12" hand crank hose reel with a 3/4" fluid path for 5/8" garden hose or 3/4" industrial water hose. 100 feet capacity. (1) 600741-1 : 12" hand cart with pneumatic tires. 1) 600963 : 10' inlet hose with female garden hose fitting and male garden hose fitting for the outlet of the reel.
600968	(1) CA37118 L : 18" hand crank hose reel with a 1" fluid path for 1" garden hose. 100 feet capacity (1) 600885-1 : 18" hand cart with pneumatic tires. (1) 600964 : 10' inlet hose with female garden hose fitting. Male fitting not needed, reel outlet is 1.00" male, N.P.T.

EA37118 L12D

SPECIFICATIONS

MODEL	TYPE	HOSE I.D.	HOSE O.D.	(F)NPTF REEL INLET	CAPACITY	WEIGHT	PRESSURE
		in / mm	in / mm	in	ft / m	lbs / kg	psi / bar
CA37118 L	Hand Crank	1 25	1.38 35	1	100 30	58 26	300 21
EA37118 L12D	Motor Driven	1 25	1.38 35	1	100 30	75 34	300 21
CA33118 L	Hand Crank	3/4 19	1.18 30	3/4	175 46	56 25	300 21
EA33118 L12D	Motor Driven	3/4 19	1.18 30	3/4	175 46	71 32	300 21
600810	Trailer only - does not include reel or hose. Above reels fit trailer dimensions. Trailer weight 154 lbs / 70 kg)						

GOODYEAR RUBBER PRODUCTS INC.
Call Toll Free: 1-866-711-4673
WebSales@GoodyearRubberProducts.com
We Ship World Wide

REEL & TRAILER HOSE CADDY Series 37000

Hand Crank and Motor Driven

Series 37000 - 3/4", 1" I.D.

Hand Cart and Trailer Hose Caddy

Reelcraft's Series 37000 reels are designed for grounds maintenance applications requiring up to 1" I.D. x 100' of hose and readily adapt to indoor or outdoor applications. Series 37000 reels are designed to fit on Reelcraft's cart or trailer. Reels are shipped completely assembled, ready to install. Installation instructions are included with each reel. Trailer, reel and accessories sold separately.

Orchard Ridge Country Club, Fort Wayne, Indiana

Trailer #600810 shown (above) with reel model **EA37118 L12D** and accessories as follows: operating switch, top and bottom roller guides, battery box, battery connector, chain guard, 10' inlet hose and 1" I.D. by 100' hose. Order reel and trailer package #600910.

CAPACITY
1" ID x 100' or 3/4" ID x 150' water hose

Reel and Trailer 600910 shown with optional accessories

5 Five Key Benefits

1. **Respond Faster**
   React quickly and easily, reduce tangled hoses, power-rewind hose
2. **Reduce Turf Damage**
   Avoid turf wear and damage from dragging hoses
3. **Save Labor, Save Money**
   Save labor by improving response time, reduce hose wear by storing on a reel
4. **Enhance Existing System**
   Provide quick supplemental irrigation to enhance your existing system
5. **Save Equipment**
   Eliminate the need for a dedicated maintenance vehicle

APPLICATIONS

- Golf Courses
- Athletic Fields/Sports Turf
- Pest Control
- Grounds Maintenance
- Agricultural
- Nurseries
- Hotels, Resorts

ADDITIONAL ACCESSORIES

S600808
Operating switch

600848-3
Top hose roller guide

600226-3
Bottom hose roller guide

600518
Chain guard

600812
Battery box (Battery not included)

600814
Battery cable connector

600829-100
Hose, 1" I.D. X 100'
1" NPT x 1" NPSH

601044-150
Hose, 3/4" I.D. X 150'
3/4" NPT x 3/4" NH

600829-10
Inlet hose, 1" I.D. X 10'
1" NPT x 1" NPSH

TRAILER PACKAGES

PACKAGE	ITEMS INCLUDED
600911	(1) 600810: Trailer
	(1) CA37118 L: Hand rewind hose reel to handle 100' of 1" I.D. hose (hose not included)
	(1) 600848-3: Roller Bracket, top wind
	(1) 600829-10: 10' Lead hose
600910	(1) 600810: Trailer
	(1) EA37118 L 12D: Hose reel to handle 100' of 1" I.D., without hose (12V DC Motor)
	(1) S600808: Switch (complete)
	(1) 600812: Battery box (battery not included)
	(1) 600518: Chain guard
	(1) 600848-3: Roller bracket, top wind

TRAILER DIMENSIONS

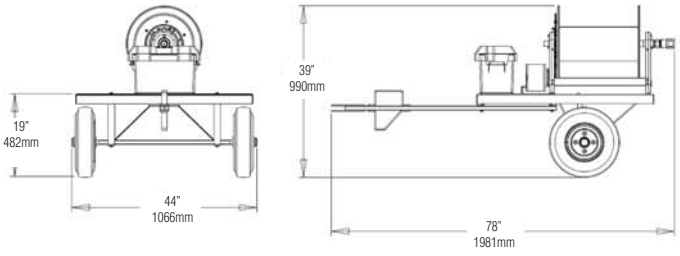

Trailer designed for off-road use only, not for passenger transport. Maximum weight capacity 400 pounds. Maximum speed 15 miles per hour. Trailer, reel and

GOODYEAR RUBBER PRODUCTS INC.
Call Toll Free: 1-866-711-4673
WebSales@GoodyearRubberProducts.com
We Ship World Wide

Nordic™ Series 1200

1" Fluid Path for 1/2" through 1" I.D. Hose

Available April 2008!

REWIND: Direct crank rewind or chain and sprocket drive powered by A.C. or D.C. electric motor, compressed air motor or hydraulic motor. Crank is not supplied on power rewind models. A pin lock assembly is optional on manual rewind reels.

INLET: ½" up to 1" female/male NPT 90° swivel joint. Straight swivel joint may be specified at extra cost.

GOOSENECK: ½", ¾", 1" female NPT. Other sizes and/or threads, including garden hose thread, can be furnished when specified.

The standard color for this series is red or gray.

Series 1200

Shown with optional three way roller bracket.

DIMENSIONS DIAGRAM

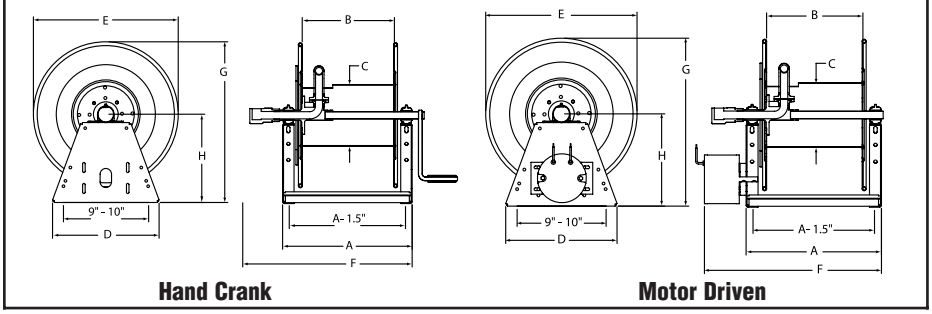

Hand Crank | Motor Driven

Available construction carbon steel, stainless steel and aluminum. Product temperatures range from -20° to +225°F and standard pressures to 1000 p.s.i. Other temperatures or pressures can be furnished at extra cost. Consult manufacturer.

Made in USA

XX 10 = Carbon Steel Construction 50 = Aluminum Construction 90 = Stainless Steel Construction

*Estimated weight on carbon steel frame.

HOSE I.D.	in	1/2	3/4	1
	mm	12.7	19.1	25.4
HOSE O.D.	in	0.845	1.18	1.38
	mm	21.5	30	35.1

SPECIFICATIONS - HOSE CAPACITY AND REEL DIMENSIONS

MODEL	HOSE LENGTH				WEIGHT CRANK*	WEIGHT MOTOR*	WEIGHT BEVEL*		A	B	C	D	E	F CRK	F ELC	F AIR	F BEVEL	G	H
12XX-19-6	ft	100	50	35	41 LB	58 LB	48 LB	in	11	6	8	14	19	22	16.5	16	22	21	11.6
	m	30	15	11	19 KG	26 KG	22 KG	mm	279	152	203	356	483	559	419	406	559	533	295
12XX-19-12	ft	200	100	70	43 LB	60 LB	50 LB	in	17	12	8	14	19	28	22.5	22	28	21	11.6
	m	61	30	21	20 KG	27 KG	22 KG	mm	432	305	203	356	483	711	572	559	711	533	295
12XX-19-18	ft	300	150	105	44 LB	61 LB	51 LB	in	23	18	8	14	19	34	28.5	28	34	21	11.6
	m	91	46	32	20 KG	28 KG	23 KG	mm	584	457	203	356	483	864	724	711	864	533	295
12XX-19-22	ft	365	180	125	45 LB	62 LB	52 LB	in	27	22	8	14	19	38	32.5	32	38	21	11.6
	m	111	55	38	20 KG	28 KG	24 KG	mm	686	559	203	356	483	965	826	813	965	533	295
12XX-19-28	ft	465	230	160	46 LB	63 LB	53 LB	in	33	28	8	14	19	44	38.5	38	44	21	11.6
	m	142	70	49	21 KG	29 KG	24 KG	mm	838	711	203	356	483	1118	978	965	1118	533	295
12XX-23-6	ft	150	75	50	49 LB	66 LB	56 LB	in	11	6	11.25	14	23	22	16.5	16	22	24	11.6
	m	46	23	15	22 KG	30 KG	25 KG	mm	279	152	286	356	584	559	419	406	559	610	295
12XX-23-12	ft	300	150	100	51 LB	68 LB	58 LB	in	17	12	11.25	14	23	28	22.5	22	28	24	12.1
	m	91	46	30	23 KG	31 KG	26 KG	mm	432	305	286	356	584	711	572	559	711	610	307
12XX-23-18	ft	450	225	150	52 LB	69 LB	59 LB	in	23	18	11.25	14	23	34	28.5	28	34	24	12.1
	m	137	69	46	24 KG	31 KG	27 KG	mm	584	457	286	356	584	864	724	711	864	610	307
12XX-23-22	ft	550	275	180	53 LB	70 LB	60 LB	in	27	22	11.25	14	23	38	32.5	32	38	24	12.1
	m	168	84	55	24 KG	32 KG	27 KG	mm	686	559	286	356	584	965	826	813	965	610	307

GOODYEAR RUBBER PRODUCTS INC.
Call Toll Free: 1-866-711-4673
WebSales@GoodyearRubberProducts.com
We Ship World Wide

LARGE FRAME REELS
Nordic™ Heavy Duty Solutions

Reelcraft's Engineered Product Solutions

Meets or Exceeds Military Vibration for Truck Transport test.
MIL-STD-810F
500,000 mile equivalent

Full Flow Design
The goose neck is contoured to match the drum diameter, which allows smooth hose wrapping and unimpeded flow.

Long Service Life
Swivel incorporates a permanently lubricated ball bearing.

Adjustable Hose Tension
The brake can be adjusted to suit the application requirements.

Trouble-Free Rewinding
Chain and sprocket drive ensures smooth and consistent operation.

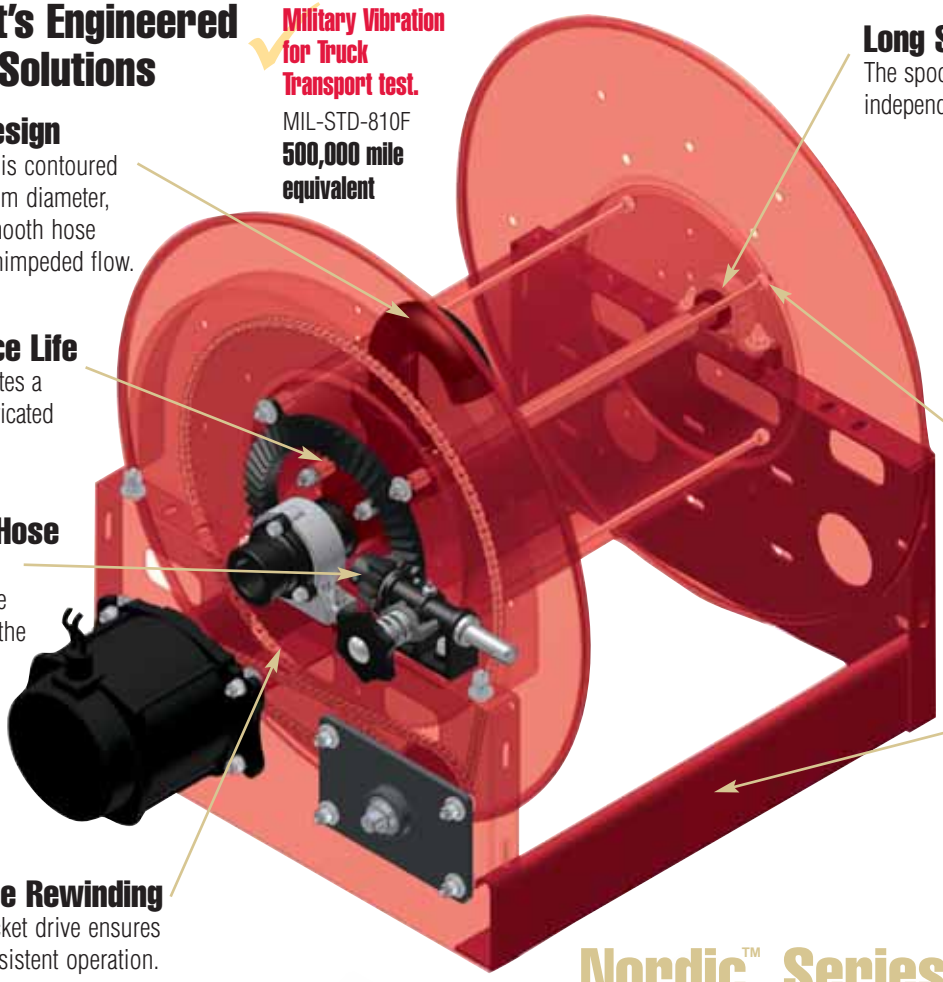

Long Service Life
The spool axial is supported by independent self-aligning bearing.

Free Rotation While Pressurized
The swing joint and spindle allows reel to freely rotate while fluid is pressurized.

Precise Rigid Construction
Proprietary unitized tie rods are zinc plated offering greater strength and resistance to vibration and corrosion.

Ultimate Corrosion Resistance
Individually powder coated components insure maximum coverage and resistance to corrosion. Stainless steel fasteners are standard.

Nordic™ Series

Drive Options		Series
EP	12 VDC Electric	2405
EA	115 VAC Electric	3905
EJ	24 VDC Electric	3705
HD	Hydraulic	5905
AR	6 AM Air	
BC	Bevel Crank	
HC	Hand Crank	
S	Storage	
CR	Cable Reel	

Exp. Proof motors are standard

Material Options/ Drive Size	
1/2" Pitch Chain	###5
5/8" Pitch Chain	###6
3/4" Pitch Chain	###7
Gear Driven	###9
Alum. Frame & Spool	##5#
S.S. Frame & Spool	##9#

Head Dia.
19
21
25
28
31
36
39
46

Drum Length
10-36" in 2" increments

Thread Size	
50	1/2"
75	3/4"
10	1"
12	1 1/4"
15	1 1/2"
20	2"
25	2 1/2"
30	3"
40	4"

Thread Type	
F	Female Outlet
FF	Female In/Out
M	Male Outlet
MM	Male In/Out
V	Victaulic

Thread Style	
NP	NPT
BP	BSPP
BT	BSPT

Fluid Path Material	
A	Aluminum
D	Ductile Iron
S	Stainless
B	Bronze

Pressure	
LP	0-600
1K	600-1000
3K	1000-3000
5K	3001-5000
6K	5001-6000
10K	10,000
15K	15,000

Inlet Style	
1	Straight
2	90 Degree
5	1" LPG
6	1½" LPG
7	2" LPG

Fluid Path Location/Direction	
1	Left Hand Top Wind
2	Left Hand Bottom Wind
3	Right Hand Top Wind
4	Right Hand Bottom Wind

Color Code	
R	Red
B	Black
W	White
G	Grey

Part No. Example: EP3905-23-28-15FFNPALP21-R00

EP(12VDC Electric Explosion Proof Motor)
3905(Series 3905 Hose Reel)
-23(23" Head Dia.) -28(28" Drum Length)
-15(1-1/2" Thread Size) FF(Female In/Out Thread Type)
NP(NPT Thread Style) A(Aluminum Fluid Path)
LP(0-600 PSI) 2(90° Inlet)
1(Left Hand Top Wind Fluid Path Location/Direction)

Additional Options
Idler
Chain Guard
Roller Bracket (Top)
Roller Bracket (Bottom)
Inboard Motor
Brake
Auxiliary Bevel Crank
Hose Boss (Guide)
Junction Box
Explosion Proof Switch
Solenoid
Circuit Breaker
Control Valve

GOODYEAR RUBBER PRODUCTS INC.
Call Toll Free: 1-866-711-4673
WebSales@GoodyearRubberProducts.com
We Ship World Wide

Nordic™ Series 2400

½", ¾" or 1" Fluid Path for ½" through 1" I.D. Hose

REWIND: **NEW** Gear-drive rewind or chain and sprocket drive powered by A.C. or D.C. electric motor, compressed air motor or hydraulic motor.

INLET: ½" up to 1" female/male NPT 90° swivel joint. Straight swivel joint may be specified at extra cost.

GOOSENECK: ½" up to 1" female/male NPT. Other sizes and/or threads, including male NST and male garden hose thread, can be furnished when specified.

Product temperatures from -20° to +225°F and standard pressures to 1000 p.s.i. Reels to operate at other temperatures or pressures can be furnished at extra cost. Consult manufacturer.

1/2" Pitch Chain Now Standard!

Series 2400
Shown with optional bevel crank.

Made in USA

DIMENSIONS DIAGRAM

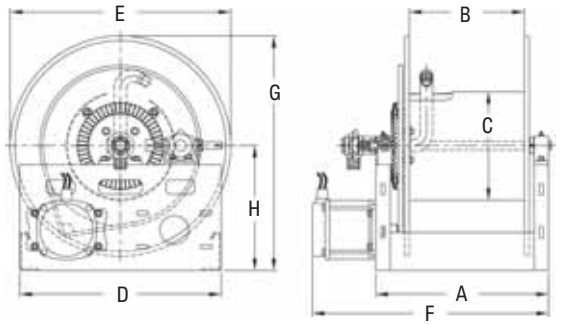

The standard color for this series is red or gray.
ADD 12" to E dimension when crank is in rewind position.

Note: Weights shown in chart are for crank rewind models.

Add these amounts and model number prefix for power rewind models.

Prefix	Type	LB / KG
EP	Electric	42 / 19
A	Air	26 / 12
H	Hyd	26 / 12

SPECIFICATIONS - HOSE CAPACITY AND REEL DIMENSIONS

HOSE I.D.	in	1/2	3/4	1
	mm	13	19	25
HOSE O.D.	in	7/8	1 9/32	1 9/16
	mm	22	33	40

MODEL		HOSE LENGTH			EST. WEIGHT		A	B	C	D	E CRK	E ELC	E AIR	E HYD	F CRK	F ELC	F AIR	F HYD	G	H
2400-19-16	ft	200	100	50	70 LB	in	21	16	11.25	21	21	21	22	21	26	29	26	28	22.5	13
	m	61	30	15	31 KG	mm	533	406	286	533	533	533	559	533	660	737	660	711	572	330
2400-23-14	ft	315	150	100	74 LB	in	20	14	11.25	21	23	23	24	23	24	27	24	26	24.5	13
	m	96	46	30	34 KG	mm	508	356	286	533	584	584	610	584	610	686	610	660	622	330
2400-23-18	ft	485	240	150	78 LB	in	24	18	11.25	21	23	23	24	23	28	31	28	30	24.5	13
	m	148	73	46	35 KG	mm	610	457	286	533	584	584	610	584	711	787	711	762	622	330
2400-23-20	ft	535	260	165	80 LB	in	26	20	11.25	21	23	23	24	23	30	33	30	32	24.5	13
	m	163	79	50	36 KG	mm	660	508	286	533	584	584	610	584	762	838	762	813	622	330
2400-23-24	ft	625	300	200	84 LB	in	30	24	11.25	21	23	23	24	23	34	37	34	36	24.5	13
	m	191	91	61	38 KG	mm	762	610	286	533	584	584	610	584	864	940	864	914	622	330
2400-25-8	ft	235	125	60	72 LB	in	14	8	11.25	21	25	25	25	25	18	21	18	20	26.5	14
	m	72	38	18	33 KG	mm	356	203	286	533	635	635	635	635	457	533	457	508	673	356
2400-25-14	ft	450	225	110	74 LB	in	20	14	11.25	21	25	25	25	25	24	27	24	26	26.5	14
	m	137	69	34	34 KG	mm	508	356	286	533	635	635	635	635	610	686	610	660	673	356
2400-31-8	ft	435	185	125	74 LB	in	14	8	11.25	24	31	31	31	31	18	21	18	20	32.5	17
	m	133	56	38	34 KG	mm	356	203	286	610	787	787	787	787	457	533	457	508	826	432
2400-31-10	ft	540	235	165	76 LB	in	16	10	11.25	24	31	31	31	31	20	23	20	22	32.5	17
	m	165	72	50	35 KG	mm	406	254	286	610	787	787	787	787	508	584	508	559	826	432

GOODYEAR RUBBER PRODUCTS INC.
Call Toll Free: 1-866-711-4673
WebSales@GoodyearRubberProducts.com
We Ship World Wide

LARGE FRAME REELS
Series 40

FEATURES

- ✓ Standard straight ball bearing swivel joint with female NPT threads and 2" victaulic groove. 90° swivel available, no extra charge.
- ✓ Hand crank, bevel crank, gear and chain drives in chart.
- ✓ Also available as standard, explosion proof 12VDC, 115 AC, hydraulic and pneumatic motor.
- ✓ Powder coated steel flanges included, aluminum also available as standard.
- ✓ Open spool spacer allows for easy access to reversible goose neck and open spool design allows for hose flexing under pressure without spool distortion.
- ✓ Plumbing and motor shown on left side; however, any configuration is available as a standard order.
- ✓ Standard colors are powder coat red with black frame. Other colors available upon request.
- ✓ Max pressure: 600 psi. Standard seals maximum temperature 174° F (79° C) and minimum temperature -20° F (-29° C). Extreme temperature seals maximum temperature 400° F (204° C) and minimum temperature -50° F (-45° C).
- ✓ Chain/gear guard is a recommended option, sold separately.

Contact Reelcraft for guard, switch and roller brackets.

Shown with optional accessories: hose and roller bracket sold separately.

Straight swivel is standard on Series 40 reels. 90° swivel available upon request.

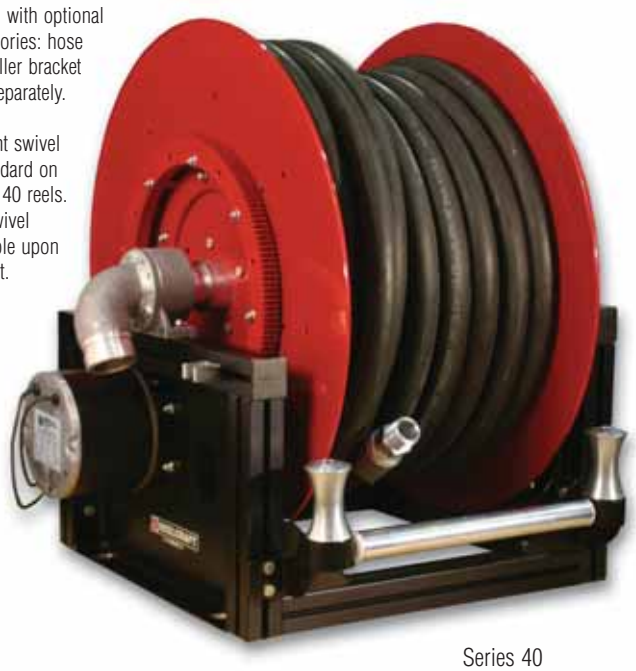

Series 40

Patent Pending

Also available in standard drive types:

Explosion proof
- 12VDC
- 24VDC
- 115VAC

Pneumatic Motor
Hydraulic Motor
Auxiliary Bevel Crank

Part Number Options 4□1131□□1LC

Hose ID:
- 1 = 1" hose
- 2 = 1 ¼" hose
- 3 = 1 ½" hose
- 4 = 2" hose

Drive Type:
- CG = Hand Crank
- BG = Bevel Crank (only)
- DH = 12VDC, Gear Drive
- EH = 12VDC, Chain Drive

Made in USA

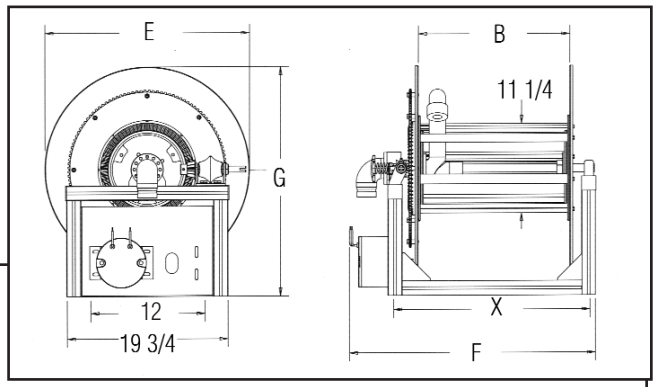

SPECIFICATIONS

HOSE CAPACITY	SERIES 41 in / mm	SERIES 42 in / mm	SERIES 43 in / mm	SERIES 44 in / mm
HOSE I.D.	1 25	1 ¼ 32	1 ½ 38	2 51
HOSE O.D.	1 9/16 40	1 13/16 46	2 1/16 52	2 9/16 65

MODEL	HOSE LENGTH ft / m	HOSE LENGTH ft / m	HOSE LENGTH ft / m	HOSE LENGTH ft / m	DIMENSIONS B in / mm	DIMENSIONS E in / mm	DIMENSIONS F Bevel in / mm	DIMENSIONS F Electric in / mm	DIMENSIONS G in / mm	DIMENSIONS X in / mm
4□1131□□1LC	80 25	50 15	— —	— —	13 330	21 533	23.75 603	25.75 654	24 559	18.75 476
4□2081□□1LC	80 25	50 15	— —	— —	8 203	25 635	17.75 451	19.75 502	26 660	13.75 349
4□1171□□1LC	100 30	80 25	50 15	— —	17 432	21 533	26.75 679	28.75 730	24 559	22.75 578
4□2101□□1LC	100 30	80 25	50 15	— —	10 254	25 635	19.75 502	21.75 552	26 660	15.75 400
4□1321□□1LC	200 60	150 45	100 30	— —	32 813	21 533	41.75 1060	43.75 1111	24 559	37.75 959
4□2191□□1LC	200 60	150 45	100 30	— —	19 483	25 635	28.75 781	30.75 781	26 660	24.75 629
4□3131□□1LC	200 60	150 45	100 30	40 12	13 330	29 737	26.75 679	28.75 730	30 762	18.75 476
4□3221□□1LC	325 100	250 75	200 60	60 18	22 559	29 737	31.75 806	33.75 857	29 737	27.75 705
4□4171□□1LC	350 105	275 84	200 60	80 24	17 432	33 838	26.75 679	28.75 730	34 864	22.75 578

GOODYEAR RUBBER PRODUCTS INC.
Call Toll Free: 1-866-711-4673
WebSales@GoodyearRubberProducts.com
We Ship World Wide

Nordic™ Series 3900

1½" Fluid Path for 1" through 1½" I.D. Hose

REWIND: **NEW** Gear-drive rewind or chain and sprocket drive powered by A.C. or D.C. electric motor, compressed air motor or hydraulic motor.

INLET: 2" straight victaulic with 1½" female NPT straight swivel joint is standard. 2" victaulic 90° with 1½" NPT female available at extra cost.

GOOSENECK: 1", 1¼" and 1½" female/male NPT outlet. Other sizes and/or threads can be furnished and must be specified.

ADD 12" to E dimension when crank is in rewind position. The standard color for this series is red or gray.

1/2" Pitch Chain Now Standard!

Shown with optional bevel crank.

Series 3900

Standard seals maximum temperature 174° F (79° C) and minimum temperature -20° F (-29° C). Extreme temperature seals maximum temperature 400° F (204° C) and minimum temperature -50° F (-45° C) and standard pressures to 300 p.s.i. Other temperatures or pressures can be furnished at extra cost. Consult manufacturer.

Made in USA

DIMENSIONS DIAGRAM

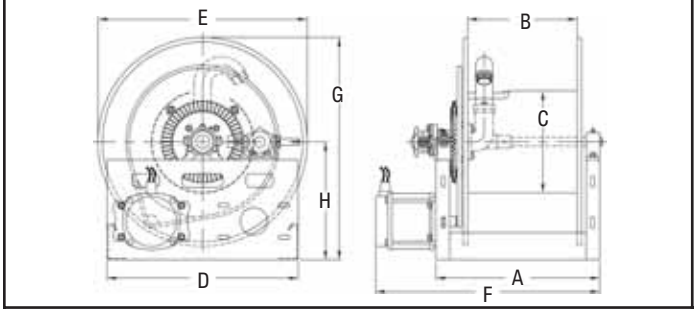

Note: Weights shown in chart are for crank rewind models.

Add these amounts and model number prefix for power rewind models.

Prefix	Type	LB / KG
EP	Electric	42 / 19
A	Air	26 / 12
H	Hyd	26 / 12

SPECIFICATIONS - HOSE CAPACITY AND REEL DIMENSIONS

HOSE I.D.	in	1	1 1/4	1 3/8	1 1/2
	mm	25	32	35	38
HOSE O.D.	in	1 9/16	1 13/16	2	2 1/16
	mm	40	46	51	52

MODEL		HOSE LENGTH				EST. WEIGHT		A	B	C	D	E CRK	E ELC	E AIR	E HYD	F CRK	F ELC	F AIR	F HYD	G	H
3900-19-16	ft	55	45	45	40	90 LB	in	22	16	11¼	21	21	21	22	21	26	29	26	28	22½	13
	m	17	14	14	12	41 KG	mm	559	406	286	533	533	533	559	533	660	737	660	711	572	330
3900-19-20	ft	70	65	60	55	93 LB	in	26	20	11¼	21	21	21	22	21	30	33	30	32	22½	13
	m	21	20	18	17	42 KG	mm	660	508	286	533	533	533	559	533	762	838	762	813	572	330
3900-23-12	ft	95	60	55	50	87 LB	in	18	12	11¼	21	23	23	24	23	22	25	22	24	24½	13
	m	29	18	17	15	39 KG	mm	457	305	286	533	584	584	610	584	559	635	559	610	622	330
3900-23-18	ft	155	90	90	80	93 LB	in	24	18	11¼	21	23	23	24	23	28	31	28	30	24½	13
	m	47	27	27	24	45 KG	mm	610	457	286	533	584	584	610	584	711	787	711	762	622	330
3900-23-20	ft	165	105	100	95	95 LB	in	26	20	11¼	21	23	23	24	23	30	33	30	32	24½	13
	m	50	32	30	29	43 KG	mm	660	508	286	533	584	584	610	584	762	838	762	813	622	330
3900-23-26	ft	220	120	110	105	100 LB	in	31	26	11¼	21	23	23	24	23	36	39	36	38	24½	13
	m	67	37	34	32	45 KG	mm	787	660	286	533	584	584	610	584	914	991	914	965	622	330
3900-23-28	ft	240	145	140	135	103 LB	in	34	28	11¼	21	23	23	24	23	38	41	38	40	24½	13
	m	73	44	43	41	47 KG	mm	864	711	286	533	584	584	610	584	965	1041	965	1016	622	330
3900-23-36	ft	320	190	180	175	111 LB	in	42	36	11¼	21	23	23	24	23	46	49	46	48	24½	13
	m	98	58	55	53	50 KG	mm	1067	914	286	533	584	584	610	584	1168	1245	1168	1219	622	330
3900-25-12	ft	95	85	55	50	89 LB	in	18	12	11¼	21	25	25	25	25	22	25	22	24	26½	14
	m	29	26	17	15	40 KG	mm	457	305	286	533	635	635	635	635	559	635	559	610	673	356
3900-25-20	ft	165	155	100	95	97 LB	in	26	20	11¼	21	25	25	25	25	30	33	30	32	26½	14
	m	50	47	30	29	44 KG	mm	660	508	286	533	635	635	635	635	762	838	762	813	673	356
3900-31-12	ft	210	155	115	105	92 LB	in	18	22	11¼	24	31	31	31	31	22	25	25	24	32½	17
	m	64	47	35	32	42 KG	mm	457	305	286	610	787	787	787	787	559	635	559	610	826	432
3900-31-16	ft	305	205	155	150	96 LB	in	22	16	11¼	24	31	31	31	31	26	29	26	28	32½	17
	m	93	62	47	46	44 KG	mm	559	406	286	610	787	787	787	787	660	737	660	711	826	432

GOODYEAR RUBBER PRODUCTS INC.
Call Toll Free: 1-866-711-4673
WebSales@GoodyearRubberProducts.com
We Ship World Wide

LARGE FRAME REELS
Nordic™ Series 3700

Nordic™ Series 3700
2" Fluid Path for 1½" through 2" I.D. Hose

REWIND: **NEW** Gear-drive rewind or chain and sprocket drive powered by A.C. or D.C. electric motor, compressed air motor or hydraulic motor.

INLET: 2" straight victaulic is standard. 2" male NPT straight swivel joint may be specified at no extra cost. 2" victaulic 90° available at extra cost.

GOOSENECK: 2" female/male NPT. Other sizes and/or threads can be furnished and must be specified.

Standard seals maximum temperature 174° F (79° C) and minimum temperature -20° F (-29° C). Extreme temperature seals maximum temperature 400° F (204° C) and minimum temperature -50° F (-45° C). Standard pressures to 300 p.s.i.

1/2" Pitch Chain Now Standard!

Shown with optional bevel crank.

Series 3700

Other temperatures or pressures can be furnished at extra cost. Consult manufacturer. The standard color for this series is red or gray. ADD 12" to E dimension when crank is in rewind position.

Made in USA

Note: Weights shown in chart are for crank rewind models.

Add these amounts and model number prefix for power rewind models.

Prefix	Type	LB / KG
EP	Electric	42 / 19
A	Air	26 / 12
H	Hyd	26 / 12

DIMENSIONS DIAGRAM

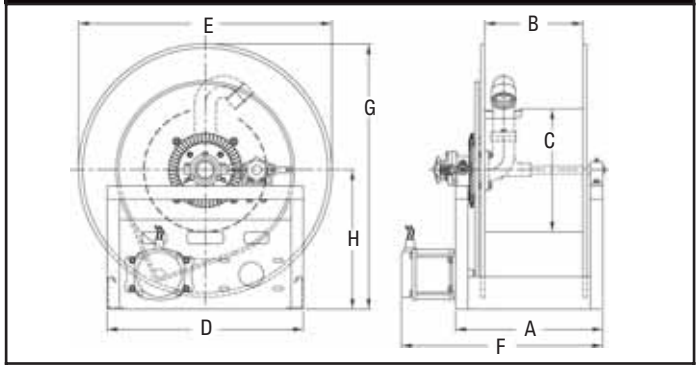

SPECIFICATIONS - HOSE CAPACITY AND REEL DIMENSIONS

HOSE I.D.	in	1 1/2	2
	mm	38	51
HOSE O.D.	in	2 1/16	2 9/16
	mm	52	65

MODEL	HOSE LENGTH		EST. WEIGHT		A	B	C	D	E CRK	E ELC	E AIR	E HYD	F CRK	F ELC	F AIR	F HYD	G	H
3700-23-20	ft	65	25	114 LB	in	26	20	15	21	23	23	24	23	30	33	30	32	24½	13
	m	20	8	52 KG	mm	660	508	381	533	584	584	610	584	762	838	762	813	622	330
3700-25-20	ft	65	55	124 LB	in	26	20	15	21	25	25	25	25	30	33	30	32	26½	14
	m	20	17	56 KG	mm	660	508	381	533	635	635	635	635	762	838	762	813	673	356
3700-25-24	ft	80	65	128 LB	in	30	24	15	21	25	25	25	25	34	37	34	36	26½	14
	m	24	20	58 KG	mm	762	610	381	533	635	635	635	635	864	940	864	914	673	356
3700-25-32	ft	115	90	136 LB	in	38	32	15	21	25	25	25	25	42	45	42	44	26½	14
	m	35	27	62 KG	mm	965	813	381	533	635	635	635	635	1067	1143	1067	1118	673	356
3700-31-12	ft	90	50	134 LB	in	18	12	15	24	31	31	31	31	22	25	22	24	32½	17
	m	27	15	61 KG	mm	457	305	381	610	787	787	787	787	559	635	559	610	826	432
3700-31-20	ft	165	90	142 LB	in	26	20	15	24	31	31	31	31	30	33	30	32	32½	17
	m	50	27	64 KG	mm	660	508	381	610	787	787	787	787	762	838	762	813	826	432
3700-31-26	ft	220	125	148 LB	in	32	26	15	24	31	31	31	31	36	39	36	38	32½	17
	m	67	38	67 KG	mm	813	660	381	610	787	787	787	787	914	991	914	965	826	432
3700-39-16	ft	225	140	182 LB	in	22	16	15	24	39	39	39	39	26	29	26	28	40½	21

GOODYEAR RUBBER PRODUCTS INC.
Call Toll Free: 1-866-711-4673
WebSales@GoodyearRubberProducts.com
We Ship World Wide

Nordic™ Series 5900

3" or 4" Fluid Path for 2" through 4" I.D. Hose

REWIND: Gear-drive crank rewind or chain and sprocket drive powered by A.C. or D.C. electric motor, compressed air motor or hydraulic motor.

INLET: 3" straight victaulic is standard. 90° victaulic swivel joint available at extra cost.

GOOSENECK: 3" female NPT. Other sizes and/or threads can be furnished and must be specified.

Product temperatures from -50° F to +400° F and standard pressures to 300 p.s.i. Other temperatures or pressures can be furnished at extra cost. Consult manufacturer.

NOTE: 4" x 90° victaulic inlet, 4" female NPT gooseneck and 24" diameter drum are standard on 4" reels.

Shown with optional bevel crank.

Series 5900

Made in USA

DIMENSIONS DIAGRAM

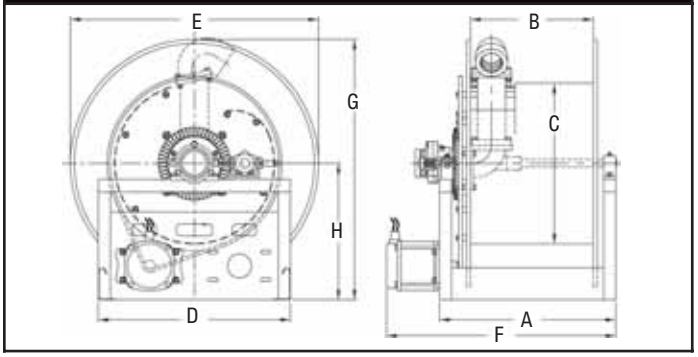

The standard color for this series is red or gray.
ADD 12" to E dimension when crank is in rewind position.

Note: Weights shown in chart are for crank rewind models.	Prefix	Type	LB / KG
	EP	Electric	42 / 19
Add these amounts and model number prefix for power rewind models.	A	Air	26 / 12
	H	Hyd	26 / 12

HOSE I.D.	in	2	2 1/2	3	4
	mm	51	64	76	102
HOSE O.D.	in	2 9/16	3 3/16	3 3/4	4 3/4
	mm	65	81	95	121

SPECIFICATIONS - HOSE CAPACITY AND REEL DIMENSIONS

MODEL		HOSE LENGTH				EST. WEIGHT		A	B	C	D	E CRK	E ELC	E AIR	E HYD	F CRK	F ELC	F AIR	F HYD	G	H
5900-31-16	ft	55	20	15		140 LB	in	22	16	20	24	31	31	31	31	26	29	26	28	32.5	17
	m	17	6	5		41 KG	mm	559	406	508	610	787	787	787	787	660	737	660	711	826	432
5900-31-24	ft	85	30	25		150 LB	in	30	24	20	24	31	31	31	31	34	37	34	36	32.5	17
	m	26	9	8		42 KG	mm	762	610	508	610	787	787	787	787	864	940	864	914	826	432
5900-31-32	ft	120	45	35		160 LB	in	38	32	20	24	31	31	31	31	42	45	42	44	32.5	17
	m	37	14	11		39 KG	mm	965	813	508	610	787	787	787	787	1067	1143	1067	1118	826	432
5900-36-12	ft	60	30	30		146 LB	in	18	12	20	24	36	36	36	36	22	25	22	24	39	21
	m	18	9	9		42 KG	mm	457	305	508	610	914	914	914	914	559	635	559	610	991	533
5900-36-16	ft	90	50	40	12	150 LB	in	22	16	20	24	36	36	36	36	26	29	26	28	39	21
	m	27	15	12	4	43 KG	mm	559	406	508	610	914	914	914	914	660	737	660	711	991	533
5900-39-12	ft	90	50	35	15	180 LB	in	18	12	20	24	39	39	39	39	22	25	22	24	40.5	21
	m	27	15	11	5	45 KG	mm	457	305	508	610	991	991	991	991	559	635	559	610	1029	533
5900-39-16	ft	135	80	50	15	200 LB	in	22	16	20	24	39	39	39	39	26	29	26	28	40.5	21
	m	41	24	15	5	47 KG	mm	559	406	508	610	991	991	991	991	660	737	660	711	1029	533

GOODYEAR RUBBER PRODUCTS INC.
Call Toll Free: 1-866-711-4673
WebSales@GoodyearRubberProducts.com
We Ship World Wide

FIRE SERVICE / BOOSTER REELS

Nordic™ Series 5000

½", ¾" or 1" Fluid Path for ½" through 1" I.D. Hose

The **ALUMINUM SERIES 5000** Reel for booster hose is corrosion resistant and weighs up to 50% less than standard steel booster reels. As it features an aluminum spool and frame assembly, plated steel fluid path and plated sprocket and fasteners, it requires **NO PAINTING OR FINISHING.**

REWIND: Gear-drive crank rewind or chain and sprocket drive powered by A.C. or D.C. electric motor, compressed air motor or hydraulic motor. Vertical and 30° rewind mechanisms are also available at extra cost.

INLET: 1" female/male NPT 90° swivel joint rated at 1000 p.s.i. Straight swivel joint may be specified at extra cost.

Series 5000

DIMENSIONS DIAGRAM

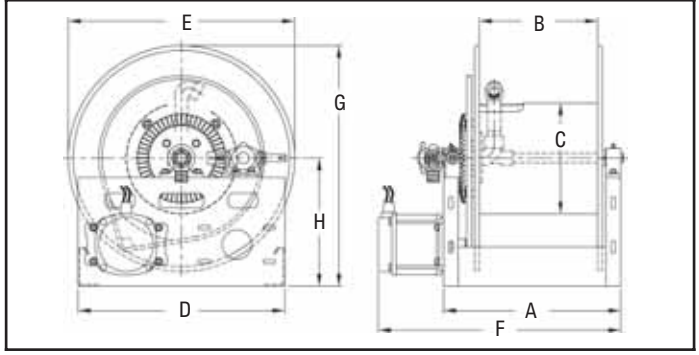

GOOSENECK: Standard 1" male NST 1.375 x 8 threads per inch. Other sizes and/or threads can be furnished and must be specified.

NOTE: Weights shown in chart are for electric rewind models. Add 12" to E dimension when crank is in rewind position.

Made in USA

SPECIFICATIONS - HOSE CAPACITY AND REEL DIMENSIONS

HOSE I.D.	in	1/2	3/4	1
	mm	13	19	25
HOSE O.D.	in	7/8	1 9/32	1 9/16
	mm	22	33	40

MODEL	HOSE LENGTH				EST. WEIGHT		A	B	C	D	E CRK	E ELC	E AIR	E HYD	F CRK	F ELC	F AIR	F HYD	G	H
5000-19-15	ft	200	100	50	75 LB	in	21	15	11.25	21	21	21	22	21	25	28	25	27	22.5	13
	m	61	30	15	34 KG	mm	533	381	286	533	533	533	559	533	635	711	635	686	572	330
5000-23-14	ft	315	150	100	74 LB	in	20	14	11.25	21	23	23	24	23	24	27	24	26	24.5	13
	m	96	46	30	34 KG	mm	508	356	286	533	584	584	610	584	610	686	610	660	622	330
5000-23-18	ft	485	240	155	78 LB	in	24	18	11.25	21	23	23	24	23	28	31	28	30	24.5	13
	m	148	73	47	35 KG	mm	610	457	286	533	584	584	610	584	711	787	711	762	622	330
5000-23-20	ft	535	260	165	79 LB	in	26	20	11.25	21	23	23	24	23	30	33	30	32	24.5	13
	m	163	79	50	36 KG	mm	660	508	286	533	584	584	610	584	762	838	762	813	622	330
5000-23-24	ft	625	300	200	81 LB	in	30	24	11.25	21	23	23	24	23	34	37	34	36	24.5	13
	m	191	91	61	37 KG	mm	762	610	286	533	584	584	610	584	864	940	864	914	622	330
5000-25-8	ft	250	125	65	72 LB	in	14	8	11.25	21	25	25	25	25	18	21	18	20	26.5	14
	m	76	38	20	33 KG	mm	356	203	286	533	635	635	635	635	457	533	457	508	673	356
5000-25-14	ft	455	225	110	76 LB	in	20	14	11.25	21	25	25	25	25	24	27	24	26	26.5	14
	m	139	69	34	34 KG	mm	508	356	286	533	635	635	635	635	610	686	610	660	673	356
5000-31-8	ft	435	185	125	74 LB	in	14	8	11.25	24	31	31	31	31	18	21	18	20	32.5	17
	m	133	56	38	34 KG	mm	356	203	286	610	787	787	787	787	457	533	457	508	826	432
5000-31-10	ft	540	235	165	76 LB	in	16	10	11.25	24	31	31	31	31	20	23	20	22	32.5	17
	m	165	72	50	34 KG	mm	406	254	286	610	787	787	787	787	508	584	508	559	826	432

GOODYEAR RUBBER PRODUCTS INC.
Call Toll Free: 1-866-711-4673
WebSales@GoodyearRubberProducts.com
We Ship World Wide

REELCRAFT
Wind Things Up With Reelcraft™

LIQUID PROPANE REELS
Series 40 / 80000 / D80000

Motor Driven
Series 40 - 1" I.D.

SHOWN:
Series 40 Propane Reel
Aluminum with Electric Motor

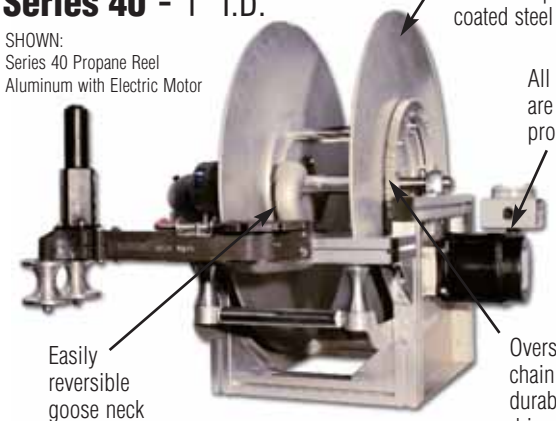

DRIVE TYPE OPTIONS	
Chain Drive	
XH	12VDC Explosion Proof
XJ	24VDC Explosion Proof
XA	115 VAC Explosion Proof
HC	Hydraulic Motor
AC	Air Motor
Gear Drive	
MH	12VDC Explosion Proof
MJ	24VDC Explosion Proof
MA	115 VAC Explosion Proof
HG	Hydraulic Motor
AG	Air Motor

413081□□1L□M

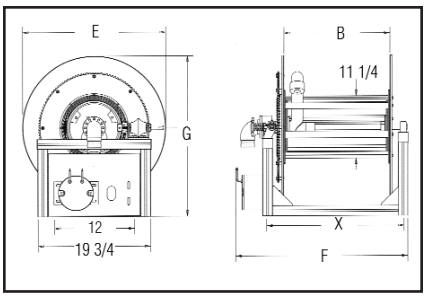

OPTIONS

Flange/End Plate Material	
C	Carbon Steel
A	Aluminum

Choose a reel model from the chart below, then use the suffx codes at left to choose a flange/ end plate material.

Made in USA

Spring Driven
Series 80000 - ½", ¾" I.D.
Series D80000 - 1" I.D.

OPTIONS

Choose a reel model from the chart below, then use the suffix codes below to choose a flange/ end plate material.

LP82000 OL□

Flange/End Plate Material	
S	Stainless Steel
P	Carbon Steel

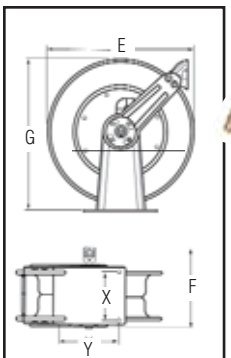

Two sealed ball bearings for smooth rotation of main shaft

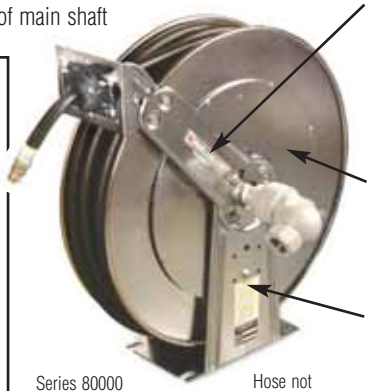

Series 80000
Stainless steel
With Full Circle® swivel
Hose not included

Containerized spring assembly for easy maintenance

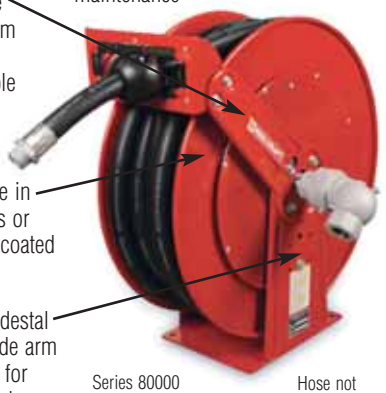

Series 80000
Carbon steel
With Full Circle® swivel
Hose not included

SPECIFICATIONS

MODEL	HOSE I.D.		HOSE O.D.		CAPACITY	PRESSURE		WEIGHT		B		E		F		G		X		Y	
	in	mm	in	mm	ft	psi	bar	lbs	kg	in	mm	in	mm	in	mm	in	mm	in	mm	in	mm
SERIES 80000 / D80000: SPRING DRIVEN REELS																					
LP82000 OL□*	½	13	.845	22	100	300	21	82	37	____		24	610	15	381	25.375	645	6	153	10	254
LP83000 OL□*	¾	19	1.188	30	50	500	34	82	37	____		24	610	15	381	25.375	645	6	153	10	254
LPD83000 OL□*	¾	19	1.188	30	75	500	34	77	35	____		24	610	16.375	416	25.375	645	7.875	199	10.5	267
LPD84000 OL□*	1	25	1.500	38	50	500	34	77	35	____		24	610	16.375	416	25.375	645	7.875	199	10.5	267
SERIES 40: MOTOR DRIVEN REELS																					
413081□□1L□M*	1	25	1¼	32	125	600	42	101	46	8	203	29	737	22	559	32	813	13.75		14.5	368
412121□□1L□M*	1	25	1¼	32	125	600	42	95	43	12	305	25	635	26	600	28	711	17.75		14.5	368
413101□□1L□M*	1	25	1¼	32	150	600	42	102	46	10	254	29	737	24	610	32	813	15.75		14.5	368
412151□□1L□M*	1	25	1¼	32	150	600	42	98	44	15	381	25	635	29	737	28	711	20.75		14.5	368
413131□□1L□M*	1	25	1¼	32	200	600	42	105	48	13	330	29	737	27	686	32	813	18.75		14.5	368

GOODYEAR RUBBER PRODUCTS INC.
Call Toll Free: 1-866-711-4673
WebSales@GoodyearRubberProducts.com
We Ship World Wide

LARGE FRAME REELS
Nordic™ Series 3900 LPG

LIQUID PROPANE REELS
Nordic™ Series 3900 LPG
1½" Fluid Path for 1" through 1½" I.D. Hose

REWIND: Gear-drive or chain and sprocket drive powered by explosion proof A.C. or D.C. electric motor, compressed air motor or hydraulic motor.

INLET: Full Circle® UL approved swivels available in 1", 1½" and 2" as standard.

Hose Boss™ (optional accessory)
The Hose Boss™ Rewind Assist consists of a rewind switch mounted in an extended arm with two hose rollers. Assists in efficiently and safely unwinding and rewinding hose.

Shown: Nordic™ Series 3900 LPG with optional Hose Boss™ and white powder coat paint

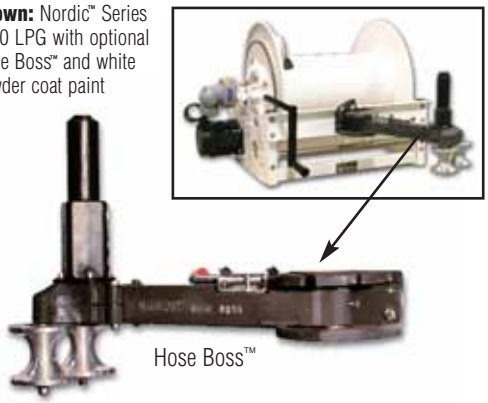

Hose Boss™

Polished aluminum now available!

Series 2000

Made in USA

DIMENSIONS DIAGRAM

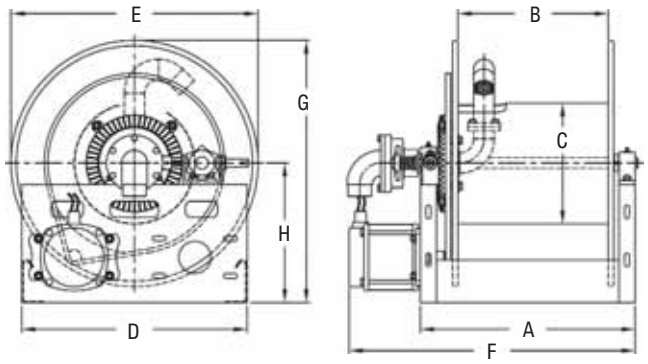

HOSE I.D.	in	1	1 1/4	1 1/2	2
	mm	25	32	38	51
HOSE O.D.	in	1 9/16	1 13/16	2 1/16	2 9/16
	mm	46	46	52	65

SPECIFICATIONS - HOSE CAPACITY AND REEL DIMENSIONS

MODEL		HOSE LENGTH				Est. Weight		A	B	C	D	E	F	G	H
3905-19-20	ft	75	70	55		103 LB	in	26	20	11.25	21	21	33	22.5	13
	m	23	21	17		47 KG	mm	660	508	286	533	533	838	572	330
3905-23-16	ft	125	90	75		100 LB	in	22	16	11.25	21	23	29	24.5	13
	m	38	27	23		45 KG	mm	559	406	286	533	584	737	622	330
3905-23-20	ft	160	125	100		105 LB	in	26	20	11.25	21	23	33	24.5	13
	m	49	38	30		48 KG	mm	660	508	286	533	584	838	622	330
3905-23-24	ft	200	150	125		110 LB	in	30	24	11.25	21	23	37	24.5	13
	m	61	46	38		50 KG	mm	762	610	286	533	584	940	622	330
3905-25-14	ft	150	100	65		102 LB	in	20	14	11.25	21	25	27	26.5	14
	m	46	30	20		46 KG	mm	508	356	286	533	635	686	673	356
3905-25-18	ft	200	150	80		105 LB	in	24	18	11.25	21	25	31	26.5	14
	m	61	46	24		48 KG	mm	610	457	286	533	635	787	673	356
3905-23-26	ft			90	35	112 LB	in	32	26	15	21	23	39	24.5	13
	m			27	11	51 LG	mm	813	660	381	533	584	991	622	330
3905-31-12	ft			90	50	102 LB	in	18	12	15	24	31	25	32.5	17
	m			27	15	46 KG	mm	457	305	381	610	787	635	826	432

GOODYEAR RUBBER PRODUCTS INC.
Call Toll Free: 1-866-711-4673
WebSales@GoodyearRubberProducts.com
We Ship World Wide

PETROLEUM SERVICE REELS

Nordic™ Series 3800

1½" or 2" Fluid Path for 1¼" through 2" I.D. Hose

REWIND: Chain and sprocket drive powered by A.C. or D.C. electric motor, compressed air motor or hydraulic motor. 30° manual rewind assembly.

INLET: 90° 2" victaulic is standard. Straight swivel joints may be specified at no extra cost.

GOOSENECK: 1¼", 1½" or 2" female/male NPT is available. Specify male or female fitting and hose size when ordering.

BRAKES AND LOCKS: Manual friction brake is standard. Air operated caliper brake is available at extra cost.

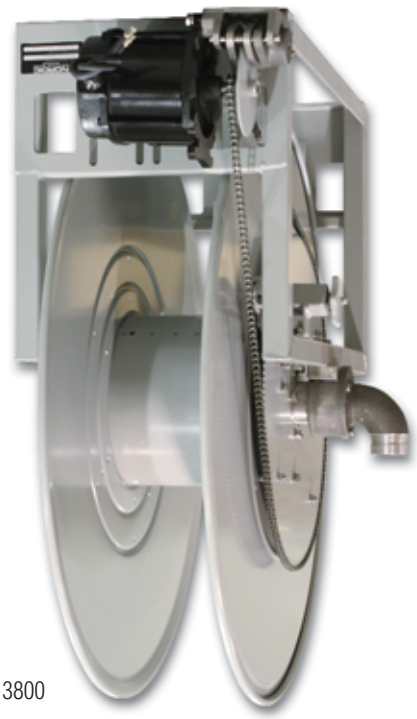

Series 3800

Made in USA

DIMENSIONS DIAGRAM

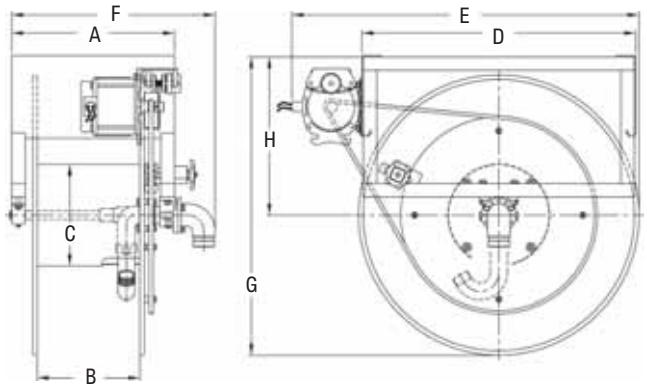

Standard seals maximum temperature 174° F (79° C) and minimum temperature -20° F (-29° C). Extreme temperature seals maximum temperature 400° F (204° C) and minimum temperature -50° F (-45° C). Standard pressures to 300 p.s.i.

Other temperatures or pressures can be furnished at extra cost. Consult manufacturer. The standard color for this series is red or gray.

HOSE I.D.	in	1 1/4	1 3/8	1 1/2	2
	mm	32	35	38	51
HOSE O.D.	in	1 13/16	2	2 1/16	2 9/16
	mm	46	51	52	65

SPECIFICATIONS - HOSE CAPACITY AND REEL DIMENSIONS

MODEL	HOSE LENGTH				EST. WEIGHT		A	B	C	D	E	F	G	H
3800-31-10	ft	130	90	80	174 LB	in	16	10	11.25	30	38.5	20.25	33	17.5
	m	40	27	24	79 KG	mm	406	254	286	762	978	514	838	445
3800-31-12	ft	155	115	105	176 LB	in	18	12	11.25	30	38.5	22.25	33	17.5
	m	47	35	32	80 KG	mm	457	305	286	762	978	565	838	445
3800-31-16	ft	205	155	150	180 LB	in	22	16	11.25	30	38.5	26.25	33	17.5
	m	62	47	46	82 KG	mm	559	406	286	762	978	667	838	445
3800-39-7	ft	120	100	85	212 LB	in	13	17	11.25	32	43.5	17.25	41	21.5
	m	37	30	26	96 KG	mm	330	432	286	813	1105	438	1041	546
3800-39-9	ft	150	135	120	214 LB	in	15	9	11.25	32	43.5	19.25	41	21.5
	m	46	41	37	97 KG	mm	381	229	286	813	1105	489	1041	546
3800-39-11	ft	220	170	155	216 LB	in	17	11	11.25	32	43.5	21.25	41	21.5
	m	67	52	47	98 KG	mm	432	279	286	813	1105	540	1041	546
3800-31-13	ft	120	110	105	60	178 LB	in	19	13	15	30	38.5	24.5	33	17.5
	m	37	34	32	18	81 KG	mm	483	330	381	762	978	622	838	445
3800-39-12	ft	225	180	160	105	218 LB	in	18	12	15	32	43.5	23.5	41	21.5

GOODYEAR RUBBER PRODUCTS INC.
Call Toll Free: 1-866-711-4673
WebSales@GoodyearRubberProducts.com
We Ship World Wide

LARGE FRAME REELS
Nordic™ Series 6000

PETROLEUM / AVIATION FUEL SERVICE
Nordic™ Series 6000
1½", 2" or 3" Fluid Path for 1" through 3" I.D. Hose

REWIND: Chain and sprocket drive powered by A.C. or D.C. electric motor, compressed air motor or hydraulic motor.

INLET: 2" victaulic is standard for 1" through 2" ID hose. 3" victaulic is standard for 2½" and 3" ID hose. 1½", 2" and 3" NPT or BSPP available. 90° Inlets available at no extra cost.

GOOSENECK: 1½", 2" and 3" NPT or BSPP. Specify male or female threads for gooseneck.

BRAKES AND LOCKS: Air operated caliper brake and idler assembly is standard. Manual friction brake optional.

MATERIALS: Standard frame and spool assembly are of heavy duty steel construction. Also available in aluminum. The standard color for this series is red or gray.

OPERATING PRESSURE: 300 p.s.i. maximum.

OPERATING TEMPERATURES: maximum 400°F (204°C) / minimum -40°F (-40°C). Reels to operate at other temperatures or pressure ratings available at extra cost. Consult manufacturer.

Series 6000

Made in USA

HOSE I.D.	in	1 3/8	1 1/2	2	2 1/2	3
	mm	35	38	51	64	76
HOSE O.D.	in	2	2 1/16	2 9/16	3 3/16	3 3/4
	mm	51	52	65	81	95

*Drum diameter confirms to API 1529 Appendix A.

MODEL	HOSE LENGTH						DIMENSIONS			
							D	E	G	H
6000-47	ft	55	50	30	25	20	in	38.5	47	48.5	25
	m	17	15	9	8	6	mm	978	1194	1232	635
6000-55	ft	80	75	50	40	35	in	38.5	55	55.75	28.25
	m	24	23	15	12	11	mm	978	1397	1416	718
6000-62	ft	100	100	70	50	50	in	38.5	62	62.75	31.75
	m	30	30	21	15	15	mm	978	1575	1594	807
6000-68	ft	125	120	85	70	60	in	38.5	68	68.75	34.75
	m	38	37	26	21	18	mm	978	1727	1746	883
6000-72	ft	150	140	100	80	70	in	38.5	72	72.75	36.75
	m	46	43	30	24	21	mm	978	1829	1848	934

DIMENSIONS										
Hose I.D.	Drum* Width	A		B		C		F	
		in	mm	in	mm	in	mm	in	mm
1 3/8"	2.5"	12	305	2.5	64	18	457	18.5	470
1 1/2"	2.5"	12	305	2.5	64	18	457	18.5	470
2"	3.5"	12	305	3.5	89	24	610	18.5	470
2 1/2"	3.5"	13	330	3.5	89	24	610	19.5	495

DIMENSIONS DIAGRAM

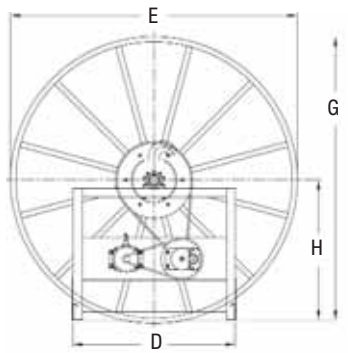

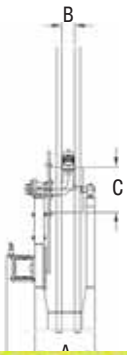

GOODYEAR RUBBER PRODUCTS INC.
Call Toll Free: 1-866-711-4673
WebSales@GoodyearRubberProducts.com
We Ship World Wide

Light/Medium Duty Cord Reels
Series LD, LG and LH

ALL NEW!

Reelcraft's new line of light and medium duty cord reels are designed for less strenuous applications in which a capable and long-lasting reel is required. These reels accomodate lengths of 16/3, 14/3, 12/3, and 10/3 diameter cable. They help make the workplace safe by keeping long electrical cords up and out of harm's way.

Series LD Cord Reels

Reelcraft's new light duty cord reel series is designed to provide moderate lengths of cable for light industrial applications. The Series LD reels feature a powder coated steel housing, adjustable cable stop, and circuit breaker that can be reset. Ideally suited to be mounted overhead, these reels are compact and require little space.

LIGHT DUTY CORD REELS

MODEL (with cable)	CORD ENDING	CORD SPECIFICATIONS AWG / mm	No. Cond.	Length ft / m	Type	VOLTS	AMPS	WGT. lbs / kg
LD2040 163 2*	Style 2	16 1.33	3	40 12	SJTW	120	0.3	9 4
LD2030 163 9	Style 9	16 1.33	3	30 10	SJTW	125	10	9 4
LD2030 143 9	Style 9	14 2.08	3	30 10	SJTW	125	13	10 6

Designed for ceiling mount. *Requires a minimum of five feet hanging cable (outside reel).
L x W x H = 9.75" x 4" x 11.5"

Series LG Cord Reels

The medium duty industrial cord reel series features longer lengths of heavier gauge cord. They are constructed from high-impact resistant composite materials to be light and compact. Their unique design allows them to be mounted overhead, on a wall, or detatched from their mounting bracket making them completely portable. The Series LG reels also feature adjustable cable stop and circuit breaker that can be reset.

MEDIUM DUTY INDUSTRIAL CORD REELS

MODEL (with cable)	CORD ENDING	CORD SPECIFICATIONS AWG / mm	No. Cond.	Length ft / m	Type	VOLTS	AMPS	WGT. lbs / kg
LG3050 163 8*	Style 8	16 1.33	3	50 15	SJTW	120	0.3	15 7
LG3050 143 9	Style 9	14 2.08	3	50 15	SJTW	125	13	15 7
LG3040 123 9	Style 9	12 3.32	3	40 12	SJTW	125	15	15 7

*Requires a minimum of five feet hanging cable (outside reel). L x W x H = 11.5" x 5" x 15.25"

Series LH Hand Crank Reels

Made with the contractor in mind, these medium duty hand crank reels are completely portable and deliver power where and when it is necessary.
Four circuit breaker protected outlets are built into the reel itself.
Steel components are powder coated for maximum corrosion resistance.

MEDIUM DUTY HAND CRANK REELS

MODEL (with cable)	CORD ENDING	CORD SPECIFICATIONS AWG / mm	No. Cond.	Length ft / m	Type	VOLTS	AMPS	WGT. lbs / kg
LH2080 143	4 Outlets	14 2.08	3	80 24	SJTW	125	10	13 6
LH3100*	4 Outlets	10 5.37	3	100 31	STW	125	15	7 3

CORD OPTIONS

Style #2
13 watt fluorescent light features a durable shock resistant lamp holder and shatter-resistant tube with switch.

Style #8
13 watt fluorescent light features an on/off switch on the handle and an outlet.

NEW!

Style #9
Triple outlet with grounded recepticles. For maximum ratings consult manufacturer.

CSA CERTIFIED
UL LISTED

NEW!

LD2040 163 2

LD2030 143 9

CSA CERTIFIED
UL LISTED

LG3050 163 8

NEW!

LG3050 143 9

NEW!

LH2080 143

GOODYEAR RUBBER PRODUCTS INC.
Call Toll Free: 1-866-711-4673
WebSales@GoodyearRubberProducts.com
We Ship World Wide

Better by Design™

Adjustable Bumper Stop
Allows any desired length of cord to be maintained outside the reel.

Corrosion-Resistant
Steel components are individually powder coated to virtually eliminate corrosion.

Reelcraft offers eight styles of outlets and lamps
- Single receptacle
- Duplex outlet box w/ GFCI (F) - 2 styles available
- R.V. plug
- Fluorescent - 2 styles available
- Incandescent - 2 styles available

Easy to Mount
Attaches to most structurally sound surfaces. Edges are curved for safety. **NOTE:** Swing brackets should be used if cords are pulled at more than 45°, see page 49.

L 4035 163 3

Adjustable Guide Arm
Multiple guide arm positions for versatile uses and easier field adjustment.

Enclosed Drive Spring
Drive mechanism is enclosed for protection against the environment.

Long Life Drive Spring
Declutching arbor virtually eliminates possibility of spring damage due to reverse winding of reel spool.

Structural Strength
Robotically welded heavy gauge steel frame .

MODEL NUMBER SIGNIFICANCE
This chart is for reference purposes only. Reels cannot be ordered by selecting from this chart. Please see Selection Charts on pages 40-41 or consult manufacturer for any questions about option combinations.

BUMPER ASSEMBLIES FOR CORD REELS

PART NUMBER	OUTSIDE DIA. OF CORD	CORD SPECIFICATIONS			
		AWG / mm²		# Cond.	Type
600193	.320" - .530"	16	1.33	3	SJO
1-HR1004-A	.438" - .624"	12	3.32	3	SJO
600267	.645"	10	5.37	3	SO

SERIES 4000 and 5000 CORD REELS FOR REFERENCE ONLY

L 4 0 5 0 1 6 3 3

LATCH TYPE
L = LATCHING
C = CONSTANT TENSION

REEL SERIES
40 = 4000 SERIES REEL
45 = 4500 SERIES REEL
55 = 5500 SERIES REEL
57 = 5700 SERIES REEL

CSA CERTIFIED

WIRE SIZE
10 = 10 GAUGE
12 = 12 GAUGE
16 = 16 GAUGE

LENGTH OF CORD
00 = W/O CORD
35 = 35 FEET
45 = 45 FEET
50 = 50 FEET

NO. OF CONDUCTORS

STYLE NUMBERS
NONE. OPEN END
1 = INCANDESCENT LAMP
2 = FLUORESCENT LAMP
3 = SINGLE RECEPTACLE
4 = R.V. PLUG (M)
5 = INCANDESCENT NON-SPARKING
6x = FLUORESCENT EXPLOSION PROOF
7 = DUPLEX OUTLET BOX (F) W/GFCI
8 = FLUORESCENT

GOODYEAR RUBBER PRODUCTS INC.
Call Toll Free: 1-866-711-4673
WebSales@GoodyearRubberProducts.com
We Ship World Wide

POWER CORD & LIGHT REELS Series 4000 and 5000

POWER SOURCE STYLE OPTIONS

Style #7
Metal outlet box with dual 20 AMP receptacles and GFCI protection with flip-top lid.

The GFCI Receptacle is designed to protect people from the line-to-ground shock hazards which could occur from defective power tools or appliances operating from this device or from down line outlets protected by it.

Style #4
Male rubber plug used with recreational vehicles (RV's).

Style #3A
Single 20 AMP receptacle.

Style #3B
Single 20 AMP receptacle with twist lock connector.

Style #3
Two Options
#600209
Single 15 AMP receptacle with clamp type strain relief.
(Cord size - 16 AWG)

#600251
Single 15 AMP receptacle with clamp type strain relief.
(Cord size - 12 AWG)

The Ground Fault Circuit Interrupter does not protect against short circuits or overloads. This is the function of the fuse or circuit breaker.

- ✓ Spring retractable with latch
- ✓ Compact for critical space requirements
- ✓ Durable abrasion and corrosion resistant baked-on powder coat finish
- ✓ Wall, ceiling or bench mount
- ✓ Engineered for industrial use
- ✓ All models supplied with cord are complete with approximately 4-5 foot pigtail and three-prong plug
- ✓ Adjustable cord stop

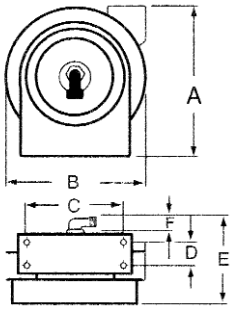

Series 4000 and 5000 models have four 5/16" diameter mounting holes. Series L5700 "E" dimension is 12 1/2".

DIMENSIONS

	L4000 L4500		L5000 L5400		L5500 L5700	
	in	mm	in	mm	in	mm
A	13.25	337	14.5	369	17.5	445
B	12.625	321	13.75	350	16.5	419
C	8	203	9.75	248	9.75	248
D	2.5	64	2.5	64	2.5	64
E	9.375	239	12.5	318	12.5*	318
F	1.75	45	2.125	54	2.125	54

*Series L5700 "E" dimension is 12.5"

L 4050 163 3

Made in USA

L 4545 123 7

L 5700

POWER CORD & CABLE REEL SELECTION CHART For indoor non-weather tight applications only

MODEL	ACCESSORY	CORD SPECIFICATIONS AWG / mm²	No. Cond.	Length ft / m	Type	VOLTS *	AMPS	WEIGHT lbs / kg
L 4035 163 3	Single Receptacle	16 1.33	3	35 11	SJTOW	115	13	22 10
L 4050 163 3	Single Receptacle	16 1.33	3	50 15	SJTOW	115	13	26 12
L 4545 123 3	Single Receptacle	12 3.32	3	45 14	SJEOW	115	15	28 13
L 5550 123 3	Single Receptacle	12 3.32	3	50 15	STOW	115	15	47 21
L 4545 123 3A	Single Connector	12 3.32	3	45 14	SJEOW	125	20	29 14
L 4545 123 3B	Twist Lock Connector	12 3.32	3	45 14	SJEOW	125	20	29 14
L 5750 103 4	R.V. Plug	10 5.37	3	50 15	SO	115	35	50 23
L 4545 123 7A	Duplex Outlet Box w/GFCI (F)	12 3.32	3	45 14	SJEOW	125	20	28 13
L 4545 123 7	Duplex Outlet Box w/GFCI (F)	12 3.32	3	45 14	SJEOW	115	**20	29 14
L 5550 123 7	Duplex Outlet Box w/GFCI (F)	12 3.32	3	50 15	STOW	115	**20	47 21

*All models UL listed at 115 Volt 60 HZ single phase. Base power cord reels without cord ends are suitable for 220V.
Inlet plug is NEMA5-15P configuration. Plug ends not set up for 20 amp. **NOTE: Swing brackets should be used if cords are pulled at more than 45°, see page 49.

POWER CORD & CABLE REEL SELECTION CHART For indoor non-weather tight applications only

MODEL	ACCESSORY	REEL CAPABILITIES sold w/o cable AWG / mm²	No. Cond.	Length ft / m	Type	VOLTS *	AMPS	WEIGHT lbs / kg
L 4000	Reel w/o electric cord	16 1.33	3	50 15	SJO	115	13	22 10
L 4100	Reel w/o electric cord	16 1.33	4	40 12	SJO	115	13	22 10
L 4500	Reel w/o electric cord	12 3.32	3	45 14	SJO	115	25	21 9
L 5000	Reel w/o electric cord	10 5.27	3	35 11	SO	115	35	29 13
L 5400	Reel w/o electric cord	12 3.32	3	35 11	SO	115	25	25 12
L 5500	Reel w/o electric cord	12 3.32	3	50 15	STOW	115	25	34 15

GOODYEAR RUBBER PRODUCTS INC.
Call Toll Free: 1-866-711-4673
WebSales@GoodyearRubberProducts.com
We Ship World Wide

POWER CORD & LIGHT REELS Series 4000 and 5000

LIGHT STYLE OPTIONS

Fluorescent Light Style #2
- Durable shock absorbing lamp holder
- Shatter-resistant tube with switch

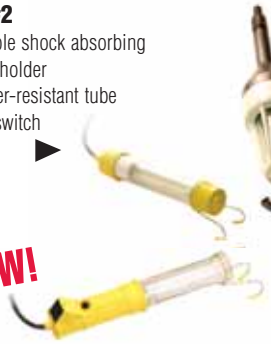

Style #6
- Explosion Proof 13 watt fluorescent hand lamp
- Automatic on/off switch at reel guide arm
- Suitable for Class 1, group C and D locations

Note: Reel is not explosion-proof.

Incandescent Hand Lamps
Style #5
- Rubber handle with vinyl-coated cage
- W/O switch or receptacle
- Automatic on/off switch at reel guide arm
- Complies with NEC #511-3,f., portable lighting equipment.
- Meets OSHA requirements.

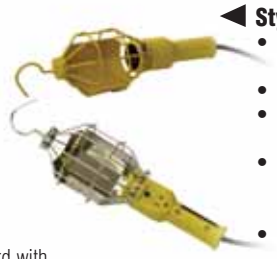

Style #8
- One foot #16/3 conductor SJTOW-A yellow cord with molded NEMA 5-15P plug
- 120v-15amp receptacle is located in line on cord
- SAF-T-TIE keeps the light plugged into receptacle
- Scratch guard protects lamp cover
- For cord assembly only, order model 1 163 3 8

Style #1
- Single receptacle tool tap
- Push-through switch
- Metal grounded guard.

UL LISTED CSA CERTIFIED

L 4050 163 1

Note: Reel is not explosion proof

Five retractable light cord options

Illuminate your work area with incandescent, fluorescent or explosion-proof hand lamps

Made in USA

L 5245 A 163 6X

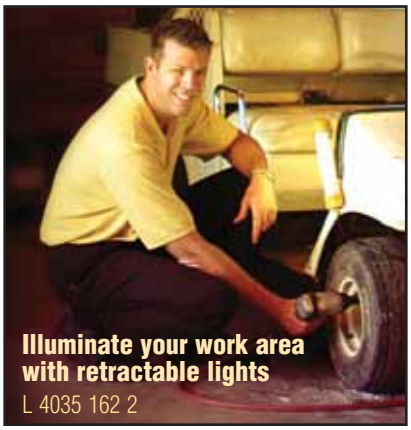

Auto-Switch Light Cord Reels

Models equipped with an automatic on/off switch incorporate a guide arm mounted switch that activates power with a pull of the cord.

LIGHT CORD REEL SELECTION CHART

For indoor non-weather tight applications only

MODEL	ACCESSORY	CORD SPECIFICATIONS						VOLTS *	AMPS	WEIGHT	
		AWG / mm²		No. Cond.	Length ft	/ m	Type			lbs	/ kg
L 4035 163 1	*Incandescent	16	1.33	3	35	11	SJTOW	115	13	22	10
L 4050 163 1	*Incandescent	16	1.33	3	50	15	SJTOW	115	13	23	11
L 4035 A163 5**	*Incandescent	16	1.33	3	35	11	SJOW	115	15	25	12
L 5245 A163 6X**	Fluorescent	16	1.33	3	45	14	SEOW	115	0.3	32	15
L 4035 162 2	Fluorescent	16	1.33	2	35	11	SJTOW	115	0.3	23	11
L 4050 162 2	Fluorescent	16	1.33	2	50	15	SJTOW	115	0.3	24	11
L 4035 163 8	Fluorescent Light and Outlet	16	1.33	3	35	11	SJTO	115	10	26	11
L 4050 163 8	Fluorescent Light and Outlet	16	1.33	3	50	15	SJTO	115	10	27	12

GOODYEAR RUBBER PRODUCTS INC.
Call Toll Free: 1-866-711-4673
WebSales@GoodyearRubberProducts.com
We Ship World Wide

HIGH CAPACITY CABLE REELS

Nordic™ Series CR2400/CR3100/CR4800

for 3-conductor service

REWIND: Direct crank rewind or chain and sprocket drive powered by A.C. or D.C. electric motor or compressed air motor.
Series CR2400 - an adjustable spring drag device is used to brake the reel.
Series CR3100/CR4800 - powered by a rugged spring protected by a tamperproof housing, a rachet mechanism locks on payout of cable, but is easily disengaged with a pull to provide rewind.

CABLE ROLLERS: All models supplied with a 4-way roller guide assembly. Roller position must be specified. If not specified, bottom wind will be supplied. Can be supplied or installed. Consult manufacturer.

CABLE STOP: A hose/cable stop should be used to prevent damage to rollers and to permit adjustment of free cable length.

Series CR4800

Many more sizes, from standard components, available on request. Consult manufacturer.

Made in USA

DIMENSIONS DIAGRAM

CR3100
CR4800

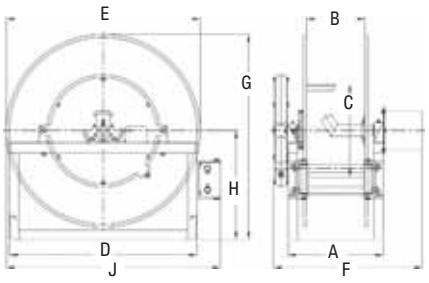

CR2400

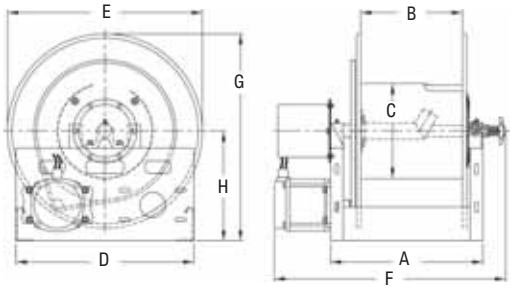

MODEL NO.	Gauge / No. of Conductors							
	16/3	14/3	12/3	10/3	8/3			
	Cable O.D. in Inches and Millimeters							
in	.375	.530	.580	.705	.750	1.00	1.25	1.50
mm	.010	.013	.015	.018	.019	.025	.032	.038

SPECIFICATIONS - HOSE CAPACITY AND REEL DIMENSIONS

F dimension based on 3 conductor slip ring. See numbering system on page 27 for complete part numbers.

MODEL		HOSE LENGTH								EST. WEIGHT Less Motor		A	B	C	D	E	E PWR	F	F PWR	G	H	J
SPRING DRIVEN REELS																						
CR3100-23-4	ft	85	85	100	100	90				92 LB	in	9	4	15	21	23		18		24.5	13	26
	m	26	26	30	30	27				42 KG	mm	229	102	381	533	584		457		622	330	660
CR3100-25-4	ft	95	100	100	100	100				97 LB	in	9	4	15	21	25		18		26.5	14	27
	m	29	30	30	30	30				44 KG	mm	229	102	381	533	635		457		673	356	686
CR4800-31-4	ft	120	120	130	130	130				118 LB	in	9.25	4	20	30	31		19		33	17.5	34.5
	m	37	37	40	40	40				54 KG	mm	235	102	508	762	787		483		838	445	876
HAND CRANK / MOTOR DRIVEN REELS																						
CR2400-23-12	ft	1900	930	775	520	430	240	155	105	72 LB	in	18	12	11.25	21	23	23	29	29	24.5	13	
	m	579	283	236	158	131	73	47	32	33 KG	mm	457	305	286	533	584	584	737	737	622	330	

GOODYEAR RUBBER PRODUCTS INC.
Call Toll Free: 1-866-711-4673
WebSales@GoodyearRubberProducts.com
We Ship World Wide

Heavy Duty Cord and Cable Storage Reels

Series 30000

Keep long lengths of expensive electrical cord off the ground and out of harm's way with Reelcraft's expanded Series 30000 line, which includes cable storage reels and live power cord. These reels are designed to handle long lengths of 10/3, 12/3 and 16/3 cable.

Reelcraft's Series 30000 storage reels and live power cord reels are constructed of heavy gauge steel and are assembled with vibration-proof, self-locking fasteners to ensure assembly integrity. They undergo a five-stage cleaning process and are individually powder-coated for the highest quality, corrosion-resistant paint adhesion. These reels are suited for indoor, non weather-tight applications only.

Cord/Cable Storage Reels

Cord and cable storage reels are used for storage, unwinding, and winding of conductive cord/cable. The reel is not intended to be live and the power source must be disconnected while reeling/de-reeling to avoid twisting the wires. Series 30000 cable storage reels are available in hand crank only.

NEW!

CA30112-CS
Cable not included.

Live Power Cord Reels

Live power cord reels have collector rings that allow the reel to wind/unwind the cord/cable with live current without twisting the wires. Live storage reels offer the advantage of using a reel as an effective piece of operating equipment rather than a simple device for the storage of hose. Live Series 30000 power cord reels are available in direct hand crank, bevel gear crank or electric motor-driven rewind.

NEW!

LE312 123 12D

Made in USA

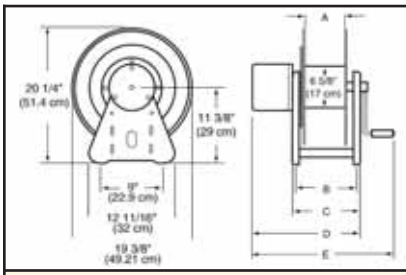

Four 1/2 inch (12.7mm) diameter mounting holes.

DIMENSIONS

	CA30106-CS		CA30112-CS		LB312 123 LB312 103		LC312 103 LC312 103		LE312 123 12D LE312 103 12D	
	in	mm	in	mm	in	mm	in	mm	in	mm
A	6	153	12	305	12	305	12	305	12	305
B	9.75	248	15.75	400	15.75	400	15.75	400	15.75	400
C	11	28	17	432	17	432	17	432	17	432
D	N/A		N/A		23.75	603	23.75	603	23.75	603
E	19	483	25	635	29.25	743	29.375	746	25	635

SPECIFICATIONS

MODEL (without cable)	DRIVE TYPE	CORD SPECIFICATIONS AWG / mm²	No. Cond	Length ft / m	VOLTS	AMPS	WEIGHT lbs / kg
NEW CA30106-CS*	Hand Crank	10 5.37	3	225 69	This reel is for cable storage only. Not intended to be live.		40 19
		12 3.32	3	270 82			
		16 1.33	3	845 258			
NEW CA30112-CS*	Hand Crank	10 5.37	3	455 138	This reel is for cable storage only. Not intended to be live.		46 21
		12 3.32	3	545 166			
		16 1.33	3	1695 517			
NEW LB312 123	Bevel Crank	12 3.32	3	545 166	600	30	60 27
NEW LB312 103	Bevel Crank	10 5.37	3	455 138	600	30	60 27
NEW LC312 123	Hand Crank	12 3.32	3	200 62	600	30	50 23
NEW LC312 103	Hand Crank	10 5.37	3	200 62	600	30	50 23
NEW LE312 123 12D**	Motor Driven**	12 3.32	3	200 62	600	30	70 31
NEW LE312 103 12D**	Motor Driven**	10 5.37	3	200 62	600	30	70 31

NOTE: Cord must be fully unspooled before use. Actual fill capacities vary with cord O.D. and jacket type. Consult manufacturer for

GOODYEAR RUBBER PRODUCTS INC.
Call Toll Free: 1-866-711-4673
WebSales@GoodyearRubberProducts.com
We Ship World Wide

REELCRAFT
Wind Things Up With Reelcraft™

SPRING DRIVEN
Oxygen/Acetylene/Fuel

Most Compact
Ideal for locations where space is limited

TW5425 OLP

Bevel Crank
Longest hose lengths up to 250'

BA36106 L

APPLICATIONS
- Workshop
- Industrial
- Welding Trucks
- Automotive
- Construction Equipment
- Railroads
- Cranes
- Bridge Builders
- Crane Riggers
- Mobile Service
- Agricultural
- Mining (above ground)

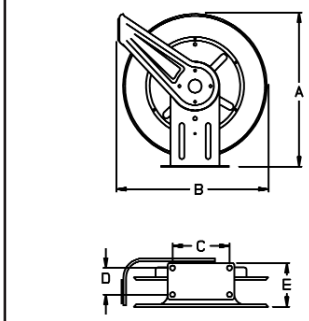

DUAL HOSE REELS FOR OXYGEN/ACETYLENE AND OXYGEN/FUEL GAS APPLICATIONS

	TW5000 O	TW7000 O	BA36106 L	BA36112 L	TW80000 O
	in / mm	in / mm	in / mm	in / mm	in / mm
A	14.5 368	20.25 514	20.625 524	20.625 524	25.375 645
B	13.75 349	19 483	17.75 451	17.75 451	24 610
C	9.75 248	7.875 200	9 229	9 229	10 254
D	2.5 64	3.875 98	9.75 248	15.75 400	6 152
E	6 152	7 178	16.625 423	22.625 575	13 330

Model TW5000 O has 5/16" (8mm) diameter mounting holes. TW7000 O has 1/2" (12.7mm) mounting holes and the TW80000 has 1/2" (12.7mm) diameter mounting holes. Acetylene (red) inlet 1/4" FPT / oxygen (green) inlet 1/4" FPT. TW80000 models inlets are 9/16" (14.28mm).

Made in USA

MODELS WITH HOSE								MODELS WITHOUT HOSE	
MODEL	WEIGHT lbs / kg	PRESSURE psi / bar	I.D. in / mm	O.D. in / mm	LENGTH ft / m			MODEL	WEIGHT lbs / kg
OXYGEN/ACETYLENE REELS									
TW5425 OLP CA	26 14	200 14	1/4 6	.530 14	25 8			TW5400 OLP	20 9
NEW STW3450 OLP UN	27 12	300 21	1/4 6	.530 14	50 15			———	———
TW7450 OLP CA QS	53 26	200 14	1/4 6	.530 14	50 15			TW7400 OLP CA	43 19
TW7460 OLP	55 27	200 14	1/4 6	.530 14	60 18			TW7400 OLP CA	43 19
SERIES 30000 HAND CRANK			1/4 6	.530 14	125 38			BA36106L	50 22
SERIES 30000 HAND CRANK			1/4 6	.530 14	250 76			BA36112L	57 25
WELDING GAS (T-GRADE) REELS									
TW5425 OLPT UN	26 14	200 14	1/4 6	.530 14	25 8			TW5400 OLPT	20 9
TW7450 OLPT UN	54 26	200 14	1/4 6	.530 14	50 15			TW7400 OLPT	43 19
TW7460 OLPT	56 27	200 14	1/4 6	.530 14	60 18			TW7400 OLPT	43 19
TW84100 OLPT QS	105 48	200 14	1/4 6	.530 14	100 30			TW84000 OLPT	80 36
TW86075 OLPT	99 45	200 14	3/8 10	.625 16	75 23			TW86000 OLPT	86 39

Acetylene and fuel gas (red) inlet 1/4" FPT / oxygen (green) inlet 1/4"FPT.TW84000 and TW86000 have B size 9/16" - 18 UNF male welding inlets.

HOSE INLET CONNECTING FITTINGS - OPTIONAL

MODEL NO.		INLET CONNECTION FITTINGS
90°	S300090	ACETYLENE Bsize 9/16 - 18 LH (M) x 1/4" NPT (M)
	S300091	OXYGEN Bsize 9/16 - 18 RH (M) x 1/4" NPT (M)
Straight	261371	OXYGEN Bsize 9/16 - 18 RH (M) x 3/8" NPT (M)

NOTE:
Reels without hose. Model Series TW5400 OLP, TW 7400 OLP, TW 84000 OLPT and TW 86000 OLPT are U/L listed #70H2.

In a hurry? QS
We can ship same day!

GOODYEAR RUBBER PRODUCTS INC.
Call Toll Free: 1-866-711-4673
WebSales@GoodyearRubberProducts.com
We Ship World Wide

COMPLETE WELDING SERIES
Series TW and BA

FEATURES

- ✓ Designed to increase safety in the work area with a resulting increase in productivity and efficiency
- ✓ Full flow shaft swivels
- ✓ Independent dual swivel body manufactured from aluminum and hard coated for wear resistance assures positive separation of gases due to its unique design
- ✓ Double-sealed, "O" rings prevent leakage
- ✓ Swivel body and inlet are both permanently identified with machined groves on the acetylene side to assure proper installation
- ✓ Durable abrasion and corrosion resistant baked-on red powder-coated finish
- ✓ Reel frame, spool and drum are fabricated of heavy gauge steel
- ✓ Temperature operating range - 20° F / -29° C to +250° F / +120° C

NEW!

Economical

Lightweight for hose lengths up to 50'

STW3450 OLP
*See page 19 for additional details.
Made in Australia

UL LISTED

TW7450 OLP

Most Popular

Spring driven for hose lengths up to 60'

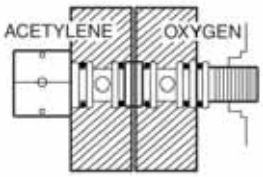

Dual swivel is an exclusive Reelcraft design

Independent dual swivel body manufactured from aluminum and hard coated for wear resistance. Assures positive separation of gases due to its unique design.

Double - sealed, special molded "O" rings prevent leakage. Swivel body and inlet are both permanently identified with machined grooves on the acetylene side to assure proper installation. Available with TW 5000 and TW 7000 series reels.

High Volume

Dual welding, spring driven for high volume of gas

UL LISTED

Available in T grade only

TW84100 OLPT

"T" GRADE FUEL GAS REELS

"T" grade hose reels are used for a wide variety of gases such as mapp gas

When ordering any welding hose reels you must specify the type of gas being

To order "T" Grade reels, add a suffix "T" to the TW Models. Example - TW 5425

GOODYEAR RUBBER PRODUCTS INC.
Call Toll Free: 1-866-711-4673
WebSales@GoodyearRubberProducts.com
We Ship World Wide

REELCRAFT
Wind Things Up With Reelcraft™

WELDING CABLE
Series CEA and Series WC

CEA30006

Hand Crank
Series CEA

- Designed to increase safety in the work area with a resulting increase in efficiency and productivity
- Welding cable reels store work lead or electrode lead, up to #2/0, safely and effectively when not in use. Each lead requires a separate reel. When welding also refer to ANSI/Asc Z 49.1
- Cable reels have a current path through a continuous 400 AMP, 90VDC (maximum) rated enclosed slip ring
- Stores cable when not in use eliminating tangled, kinked welding cables
- Maintains proper bend radius of cables - providing longer cable life
- Keeps work area and vehicles better organized resulting in better space utilization

WC80000

Shown with electrode, clamp and cable (not included)

WC7000

Spring Driven
Series WC

Made in USA

FEATURES

- ✓ All bolted heavy gauge steel construction provides long life and ease of use and maintenance.
- ✓ Manual drum lock prevents spool from turning when not in use preventing unwanted pay out of cable.

Caution:
If cable reels are to be used for extended periods of time, unwind all cable from reel to prevent heat build-up. For indoor non weather-tight applications only.

APPLICATIONS

- Steel Mills and Foundries
- Metal Working and fabrication
- Auto / Truck Service
- Power Generation and transmission
- Agricultural
- Railroads
- Mining (above ground)

SPECIFICATIONS All reels sold without cable

MODEL / CABLE SIZE	REEL CAPACITY #2 (31mm²) ft / m	#1 (39mm²) ft / m	#1/0 (50mm²) ft / m	#2/0 (62mm²) ft / m	WEIGHT lbs / kg
CEA30006	300 / 91	250 / 76	200 / 61	150 / 46	49 / 22
CEA30012	500* / 152	500* / 152	400 / 122	300 / 91	56 / 25
WC7000	———	50 / 15	50 / 15	50 / 15	49 / 22
WC80001	———	75 / 22	75 / 22	75 / 22	80 / 36
WC80002	———	100 / 31	———	———	81 / 37

*May exceed maximum cable length allowable for most welding applications
NOTE: Each cable requires separate reel.

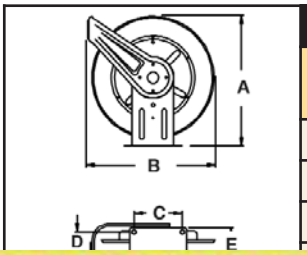

WC DIMENSIONS

	WC7000 in / mm	WC80000 in / mm
A	20.25 / 512	25.375 / 645
B	19 / 483	24 / 610
C	7.875 / 200	10 / 254

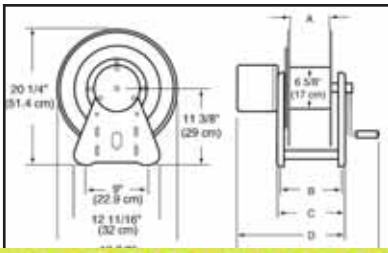

CEA DIMENSIONS

	CEA30006 in / mm	CEA30012 in / mm
A	6 / 152	12 / 305
B	9.75 / 248	15.75 / 400
C	11 / 279	17 / 432

GOODYEAR RUBBER PRODUCTS INC.
Call Toll Free: 1-866-711-4673
WebSales@GoodyearRubberProducts.com
We Ship World Wide

MULTI CONFIGURATIONS
Safe-T-Reel Series

Safe-T-Reel™ Series
Up to 150' fuel gas
Up to 200' 12/3 cable

Ideal for applications where space, weight and flexibility are key, these reels are designed for manual winding of air/water/fuel gases hose, electric cord and welding cable. Versatile in function, select configurations to suit specific needs. Safe-T-Reels™ offer trouble-free management of large capacities of hose or cord.

T-2462-0

Dual Spool
Side-by-side combinations

Dual Spool
Stacked combinations

T-2464-0

Single Spool

T-1225-04-100T

Hose and cable not included.

Made in USA

SINGLE SPOOL REELS

MODEL	AMP	REEL CAPACITY ft / in	WEIGHT lbs / kg	CABLE AWG/Cond	A in / mm	B in / mm	E in / mm
SINGLE WELDING CABLE 600 V							
T-1460-0 CA	300	200 60	22 10	--------	19 483	18 457	16.25 413
SINGLE POWER CABLE - 3 CONDUCTOR							
T-1535-003	35	200 60	22 10	8 / 3	19 483	18 457	15.75 400
T-1535-083-100*	33	100 30	50 23	8 / 3	19 483	18 457	15.75 400
T-1535-103-200*	24	200 60	81 37	10 / 3	19 483	18 457	15.75 400
T-1535-123-100*	25	100 30	46 21	12 / 3	19 483	18 457	15.75 400
T-1535-123-200*	20	200 60	71 32	12 / 3	19 483	18 457	15.75 400

* includes cable

DUAL SPOOL REELS

MODEL	AMP	REEL CAPACITY ft / m	WEIGHT lbs / kg	A in / mm	B in / mm	E in / mm
DUAL SIDE-BY-SIDE WELDING CABLE (2) 600 V						
T-2462-0	300	200 60	50 23	19 483	18 457	29 737
DUAL STACKED WELDING CABLE (2) 600 V						
T-2464-0	300	200 60	59 28	38 965	18 457	16.25 413
DUAL SIDE-BY-SIDE POWER CABLE / AIR HOSE						
T-2735-2-0*	35	200' / 150'	39.5 18	19 483	18 457	29 737

* Air hose side has ½" (12.7mm) inlet

Detail of our heavy duty shaft
with tapered roller bearing for high rigidity

Shaft sizes are 1 to 1.25" in diameter, supported by tapered roller bearings with 2 to 2.3" housings.

SINGLE SPOOL REELS

MODEL	HOSE I.D. in / mm	HOSE O.D. in / mm	CAPACITY ft / m	WEIGHT lbs / kg	PRESSURE psi / bar	A in / mm	B in / mm	E in / mm
SINGLE AIR/WATER Maximum temperature 150° F (65° C)								
T-1115-08	½ 13	.844 22	150 45	17.5 8	300 21	19 483	18 457	15.75 400
T-1116-08	½ 13	.844 22	250 76	17.5 8	300 21	19 483	18 457	21.75 552
T-1117-12	¾ 19	1.188 31	50 15	22 10	250 18	19 483	18 457	15.75 400
T-1118-12	¾ 19	1.188 31	75 23	22 10	250 18	19 483	18 457	21.75 552
SINGLE OXYGEN-ACETYLENE T-GRADE SEALS Maximum temperature 150° F (65° C)								
T-1225-04 CA	¼ 6	.530 14	150 45	19 9	200 14	19 483	18 457	16.125 410
T-1225-04-100T	¼ 6	.530 14	100 30	44 20	200 14	19 483	18 457	16.125 410
T-1226-06	3/8 10	.625 16	100 30	19 9	200 14	19 483	18 457	16.125 410

DIMENSIONS

MODEL	C	D
	inches	
T-1115 / T-1117	6	6.5
T-1225 / T-1226	6	6.5
T-1460 / T-1535	6	6.5
T-1116 / T-1118	6	12.5

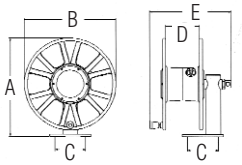

T-2462	6	6.5
T-2735	6	6.5

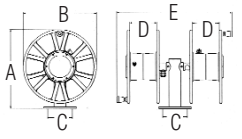

T-2464	6	6.5

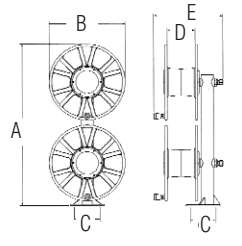

All reels have four ½" (13 mm) diameter mouting holes

Caution: Compressed air hoses should not be converted to oxygen service. Compressed air hoses are often contaminated with an oil coating, which can react

GOODYEAR RUBBER PRODUCTS INC.
Call Toll Free: 1-866-711-4673
WebSales@GoodyearRubberProducts.com
We Ship World Wide

REELCRAFT
Wind Things Up With Reelcraft™

TOOL BALANCERS
Medium and Heavy Duty

TOP FIVE BENEFITS

1. Balances the weight of assembly tools making them nearly weightless
2. Reduces operator fatigue
3. Improves safety and ergonomics
4. Increases productivity, keeps tools positioned for immediate use with minimal operator motion
5. Reduces tool damage, prevents tools from being accidentally dropped

SAFETY CLIP
261241

Bright zinc plated steel safety latch for tool attachment and other uses. Measures 2.375" (60mm) long. Included with each model.

Tool balancers make tools nearly weightless, reduce fatigue

SERIES TB 1-5 DIMENSIONS
ALL DIMENSIONS IN INCHES (mm)

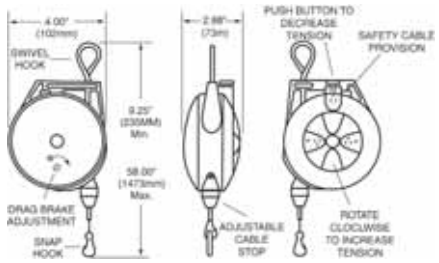

TOOL BALANCERS Medium Duty Selection Chart

MODEL	MIN - MAX LOAD lbs / kg	CABLE LENGTH* ft / m	REEL WEIGHT lbs / kg
TB 01	0.0 - 1.5 0.0 - 0.7	6 1.8	1.0 0.5
TB 03	1.5 - 3.0 0.7 - 1.4	6 1.8	1.0 0.6
TB 05	3.0 - 5.0 1.4 - 2.3	6 1.8	1.5 0.7

*Cable lengths listed are "active" or "working" cable. Safety tool clip and cable stop included.

TB 10-23 DIMENSIONS
ALL DIMENSIONS IN INCHES (mm)

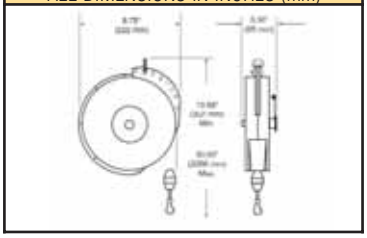

TOOL BALANCERS Heavy Duty Selection Chart

MODEL	MIN - MAX LOAD lbs / kg	CABLE LENGTH* ft / m	REEL WEIGHT lbs / kg	RATCHET LOCK
Constant pull reels - may be adjusted to balance through 6-18 in. (152-457mm) range.				
TB 10	5.0 - 10 2.3 - 4.5	8 2.4	10 4.5	NO
TB 12	8.0 - 12 3.6 - 5.4	8 2.4	10 4.5	NO
TB 15	10 - 15 4.5 - 6.8	8 2.4	10 4.5	NO
TB 23	16 - 23 7.2 -10.4	8 2.4	10 4.5	NO
Reels with ratchet lock - retract tool upward when manually released				
TBL 10	5.0 - 10 2.3 - 4.5	8 2.4	6 2.7	YES
TBL 12	8.0 - 12 3.6 - 5.4	8 2.4	7 3.1	YES
TBL 15	10 - 15 4.5 - 6.8	8 2.4	8 3.6	YES

OPTIONAL ACCESSORIES
Cables can be combined for added length

OVERHANG CABLE	
MODEL NO.	LENGTH
600605-3	3.0 ft / 91.5 cm
600605-5	5.0 ft / 152.4 cm
SAFETY CABLE/CHAIN	
MODEL NO.	LENGTH
600603*	1.0 ft / 30.5 cm
600604**	1.0 ft / 30.5 cm

* Nylon covered steel cable (1 to 5 lbs models)
** Steel link chain (10 to 23 lbs models)

Strongly recommended, secondary steel cable or steel link chain. Prevents

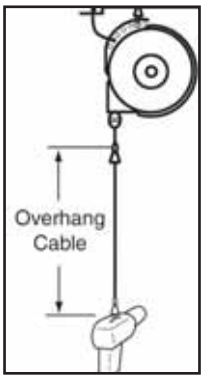

Nylon covered steel cable with safety clip. Brings tools closer to work area without unwinding cable

GOODYEAR RUBBER PRODUCTS INC.
Call Toll Free: 1-866-711-4673
WebSales@GoodyearRubberProducts.com
We Ship World Wide

HR 1059

HR 1145

600168

ROLLER HOSE GUIDE ASSEMBLIES

MODEL NUMBER	ACCOMMODATES HOSE O.D. in (mm)	WEIGHT lbs / kg	DIMENSION A in / mm	B in / mm	C in / mm	D in / mm	E in / mm	F in / mm
HR 1057	.603 (16) - .906 (23)	.25 .12	0.875 22.3	3.125 79.4	3.125 79.4	1.6875 29.8	1.6875 29.8	N/A
HR 1059	.250 (6.4) - .625 (15.9)	.25 .12	0.625 15.9	3.125 79.4	3.125 79.4	1.6875 29.8	1.6875 29.8	N/A
HR 1145	.603 (16) - .906 (23)	.34 .15	2 50.8	1 25.4	3.75 95.3	2.75 69.9	2.125 54.1	3.125 79.4
S270109	.900 (23) - 2.00 (50.8)	5.39 2.44	5.25 133.4	2.375 60.4	12 305	8 204	5 127	10.5 267
600168	.900 (23) - 1.375 (34.9)	.75 .34	1.75 44.5	2.0625 27	5.125 130	5.125 130	4 102	4 102

These four-way roller guide assemblies are for use with reels on cabinet door openings and for similar locations where sharp edges may cut or damage the hose, four-way design permits pulling or retracting hose at any angle. Model S270109 has nylon rollers mounted on an 11 gauge steel frame with pre-drilled mounting holes.

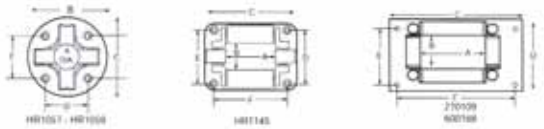

Note: A hose bumper should be used with the four-way roller hose guide assemblies to prevent damage to rollers and nozzles. See chart on page 51.

ADDITIONAL ACCESSORIES

340° PIVOT BASE

Aligns reel to the direction of hose or cord run. May be mounted with reel upright or hanging. Weight 10 lbs. (5kg). **Note:** Use if hoses or cords are pulled at more than 45°.

FOR REEL SERIES	PART #
RT / 4000 / 5000 / 5005 / 7000	600608
80000 / D80000 / 30006	600801
30012	600801-12

600992

600626

WALL-MOUNTED UNIVERSAL SWING BRACKET

Bracket will pivot approximately 180°. All steel construction with a durable baked on powder coat finish. Weight 6 lbs (3kg).
Note: Use if hoses or cords are pulled at more than 45°.
Note: Not for overhead mounting.

FOR REEL SERIES	PART #
RT	600992
4000 / 5000	600993
RT / 4000 / 5000 / 5005 / 7000	600626
80000 / D80000	600980

TOP MOUNTING CHANNELS and BEAM CLAMPS

600370 Top channel and beam clamps -for one reel
600295 Top channel and beam clamps -for two reels

For mounting Series 4000 through 7000 reels to I-beam or overhead support. Mounting channels can be mounted end to end to mount three or more reels.

600230 Adaptor Assembly

Channels are designed to accommodate Series 7000 reels. Adaptor #600230 permits the mounting of Reelcraft Series RT, 4000, 5000, 5005 and electric cord reels on mounting channel. Used with top channels and beam clamps only.

ADDITIONAL SERIES 30000 ACCESSORIES

S600808
Operating switch

600848-3
Top hose roller guide

600518
Chain guard

600812
Battery box (Battery not included)

600829-100
Hose, 1" I.D. X 100'

601044-150
Hose, 3/4" I.D. X 150'

ROLLER GUIDE ASSEMBLIES

Spools and blocks are zinc-plated to resist corrosion and abrasion. Rollers speed handling and reduce wear on hose. All painted parts are finished with durable abrasion resistant baked-on powder coat. Delrin bearing surfaces give a quiet operation with minimum wear and all features combine to give trouble-free maximum service life.

Hose Reel Spool Size in / mm	**Bottom Wind** Roller Bracket Assembly Model Number	**Top Wind** Roller Bracket Assembly Model Number	**Multi Position** Roller Bracket Assembly Model Number
Series 30000 - Four Way Rollers			
6" 153	S600693-1	S600692-1	S600533-1
12" 305	S600693-2	S600692-2	S600533-2
18" 485	S600693-3	S600692-3	S600533-3
22" 559	S600693-4	S600692-4	S600533-4
28" 712	S600693-5	S600692-5	S600533-5
Series 30000 - Three Way Rollers			
6" 153	S602108-1	S602109-1	
12" 305	S602108-2	S602109-2	
18" 485	S602108-3	S602109-3	
22" 559	S602108-4	S602109-4	
28" 712	S602108-5	S602109-5	

Bottom wind and top wind may be used with all models except bevel crank. Multi position may not be used on models with a chain guard or 37000 series reels.

Four- way rollers
(multi-position)

Three-way rollers

GOODYEAR RUBBER PRODUCTS INC.
Call Toll Free: 1-866-711-4673
WebSales@GoodyearRubberProducts.com
We Ship World Wide

OPERATING SWITCHES

600872

600870
For 115 and 230 volt DC reel motors. Push button switch with 10 AMP fuse. Used for motor #S260430.

600872
For 115 and 230 volt DC reel motors. Push button switch with 10 AMP fuse and adjustable speed control. Used for motor #S260430.

600871
Adjustable speed control only. To be used in a system which already has a switch. Used for motor #S260430.

600867

600866
12/24 VDC speed control. Used for motor #S260409, S260583, 260450 and S260626.

600811
Push-button switch. Used for all 12 or 24 volt reel motors #S260409 and 260450; up to 1/3 h.p.

S600808
600811 switch when packaged with 261604-35 mounting bracket. Used for motor #S260409 and 260450.

S260422

600869
Push-button switch. Used for all 12 or 24 volt reel motors #S260583 and S260626; up to 2/3 h.p.

S600808

600867
Switch, speed control with 25 AMP circuit breaker. Used for motor #S260409; up to 1/3 h.p.

600868
Switch, speed control with 40 AMP circuit breaker. Used for motor #S260583; up to 2/3 h.p.

S260426

S260422
40 AMP circuit breaker. Recommended for use with D.C. electric rewind motors. Manual reset, push-button must be pressed firmly to reset.

260424

S260426
Starting solenoid, 12 volt D.C. for activation of motor.

260424
Sealed push-button momentary contact switch with rubber cap. For 12 or 24 volt D.C. service.

260425

260425
Explosion proof switch, class 1 group D, for direct starting and control for A.C. rewind motor. Press to start, release to stop. May also be used with solenoid for 12 or 24 volt D.C. service.

260532

260532
Combination mounting bracket for circuit, solenoid and starting switch.

REWIND MOTORS

Reels are equipped with electric or compressed air motors to drive chain and sprocket rewind mechanisms.

ELECTRIC MOTORS

S260409 Reversible type, 12 Volt D.C. 1/3 HP.

260450 Reversible type, 24 Volt D.C. 1/3 HP.

S260430 Reversible type, single phase, explosion proof, Class 1 Group D, 115 volt A.C. 1/2 HP. An explosion proof, Class I Group D junction box is available for wiring A.C. motors. #260425.

S260626 24 Volt D.C. 2/3 HP. Electric motor reversible type. Explosion proof.

S260583 12 Volt D.C. 2/3 HP. Electric motor reversible type. Explosion proof.

HYDRAULIC MOTOR

370066 1021 RPM, 668 lb-in, 2400 psi intermittent 1800 psi continuous.

AIR MOTORS

260428 4 AM delivers up to 1 1/2 horsepower, 1/4" N.P.T. (F) inlet.

260429 6 AM delivers up to 4 horsepower, 1/2" N.P.T.F. (F) inlet.

ADDITIONAL ACCESSORIES

S600518
Optional chain shroud for series 30000 reels.

261746 Right Side
261746-1 Left Side
Optional chain shroud for Series 40 reels.

260454 Pneumatic on/off flow control valve assembly, 1/4" N.P.T. (F) inlet and outlet to be used with 4 AM compressed air motors, We also recommend using a filter, regulator, and lubricator with compressed air motors. See page 22 for series 30000 hand crank and motor driven reels.

GOODYEAR RUBBER PRODUCTS INC.
Call Toll Free: 1-866-711-4673
WebSales@GoodyearRubberProducts.com
We Ship World Wide

ADJUSTABLE HOSE BUMPERS

Adjustable hose bumpers are solid molded rubber assuring a long life and nonslip grip. Hose bumpers allow the desired length of hose to be permanently stored outside the reel. Hose bumpers are included on the reels purchased with hose. Reels purchased without hose do not include the hose bumper. When ordering, advise the part number, reel model and the hose I.D. and O.D.

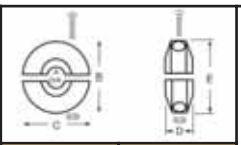

FOR REEL SERIES	PART NUMBER	HOSE O.D. in (mm)	HOSE I.D. in / mm	DIA. B-C-E ft / m	DIA. D in / mm	WEIGHT lbs / kg	
4000 / 5000 / RT400 / 3100 6000 / L4500 / L5000	1-HR1004-A	.438 (11) - .625 (16)	¼ 6	2.5 64	1.25 32	.24 .10	2-HR1004-3
4000 / 5000 / D8000 / RT400 RT600 / 6000	1-HR1004	.625(16) - .749 (19)	3/8 10	2.5 64	1.25 32	.25 .11	
7000 / 80000 / E8000 / 3100 RT800 / 5000 / D80000	1-HR1004-3	.625 (16) - .749 (19)	3/8 10	3 73	1.25 32	.24 .10	
5000 / A5005 / 7000 / 80000 D8000 / E8000 / RT800	2-HR1004-3	.750 (19) - 1.05 (27)	½ or 3/8 13 or 10	3 73	1.25 32	.23 10	
7000 / 8000 / D8000 / 80000 GC7000 / F7000 / F80000 / L7000 / DGM	3-HR1004-3	1.06 (27) - 1.30 (33)	¾ 19	3 73	1.25 32	.32 .14	8-HR1004-3
TW5000 / TW7000 / 3100T TW80000 /TWD80000	8-HR1004-3	.530 (13) twin	¼ twin 6	3 73	1.25 32	.24 .10	
TH80000 / TW80000 / 3100T TH7000 / TW8000	600521	.680 (17) twin	3/8 twin 10	3.5 89	2 51	.45 .20	
3100T / 4800T / TH80000	600522	.810 (21) twin	½ twin 13	3.5 89	2 51	.49 .22	
D9000 / E9000 / 3100 / 4800	2-HR1005	.750 (19) - 1.05 (27)	½ 13	3.5 89	2.875 73	.95 .43	600521
D9000 / E9000 / FE9000 / 3100 / 4800	3-HR1005	1.06 (27) - 1.38 (35)	¾ 19	3.5 89	2.875 73	.95 .43	
D80000 / D8000 / D9000 / E9000 / FD9000 / FE9000 / 3100 / 4800	4-HR1005	1.39 (35) - 1.55 (39)	1 25	3.5 89	2.875 73	.81 .36	
FE9500 / FF9500 / 4800	S600547-1	1.55 (39) - 1.75 (44)	1¼ 32	3.75 95	2.875 73	.70 .31	
FE9600 / FF9600 / 4800	S600547-2	1.75 (44) - 2.03 (52)	1½ 38	3.75 95	2.875 73	.57 .25	4-HR1005

INLET HOSE ASSEMBLIES

A flexible hose connection must be used between the hose reel inlet and the source of supply to prevent possible misalignment and binding or warranty is void. The inlet size of reel series 4000 O, 5000 O and 5000 E is 3/8" (9.5mm) NPTF (F), 7000 O and 7000 E is 1/2" (12.7mm) NPTF (F), D8000 O and D8000 E is 1/2" (12.7mm) NPTF (F) depending on hose size. Please furnish the following information when ordering: Part number-product and pressure to be handled. Other sizes available as well.

FOR REEL SERIES	PART NUMBER	HOSE I.D. in / mm	LENGTH ft / m	NPFT (M) (FITTINGS) in / mm	WORKING PRESSURE psi / bar	WEIGHT lbs / kg
4000 / 5000 / 5005	S601024-2	3/8 10	2 .6096	3/8 x 3/8 10 x10	300 21	.54 .244
7000 / 8000 / 80000 / RT605 / 32000	S601020-2	½ 13	2 .6096	½ x ½ 13 x13	300 21	.70 .317
D8000	S601027-2	1 24	2 .6096	1 x ¾ 13 x19	250 17	1.72 .780
D8000 / 33000	601034-3	¾ 19	3 .9194	¾ x ¾ 19 x19	250 17	1.72 .780
5000 / 5005 (OMP and EMP)	32-260043	3/8 10	2 .6096	3/8 x 3/8 10 x10	2250 156	1.00 .453
7000 / 80000 (O and EMP)	S17-260043	½ 13	2 .6096	½ x ½ 13 x13	2000 138	.91 .412
5000 / 5005 (O and EHP)	S17-260044	¼ 6	2 .6096	¼ x ¼ 6 x6	5000 345	1.00 .453
7000 O / D8000 O / D8000 EHP	S14-260044	3/8 10	2 .6096	½ x 3/8 13 x10	4000 276	.83 .376
TWIN WELDING INLET HOSE (OXYGEN/ACETYLENE)						
TW5000 / TW7000	S600100-2	¼ 6	2 .6096	(Male/Female)	200 14	.70 .317
TW5000 / TW7000	S600100-4	¼ 6	4 1.2192	(Male/Female)	200 14	1.60 .725
TW5000 / TW7000	S600100-6	¼ 6	6 1.8288	(Male/Female)	200 14	1.50 .680
'T' GRADE TWIN WELDING INLET HOSES						
TW5000 T / TW7000 T	S601031-2	¼ 6	2 .6096	(Female both ends)	200 14	.70 .317

GOODYEAR RUBBER PRODUCTS INC.
Call Toll Free: 1-866-711-4673
WebSales@GoodyearRubberProducts.com
We Ship World Wide

REPLACEMENT HOSE ASSEMBLIES Partial list

PART NUMBER	I.D. inches	O.D. inches	LENGTH feet	PRESSURE psi	BRAID	END FITINGS inches		WGT lbs
LOW PRESSURE Air and water								
601001-25	1/4	.500	25	300	Nylon Braid	¼ x ¼	NPTF(M)	3.0
601001-35	1/4	.500	35	300	Nylon Braid	¼ x ¼	NPTF(M)	3.2
601013-25	3/8	.640	25	300	Nylon Braid	¼ x ¼	NPTF(M)	4.5
S601013-35	3/8	.640	35	300	Nylon Braid	¼ x ¼	NPTF(M)	4.7
601013-50	3/8	.640	50	300	Nylon Braid	¼ x ¼	NPTF(M)	6.0
601017-70	3/8	.640	70	300	Nylon Braid	½ x ¼	NPTF(M)	7.9
601015-100	3/8	.640	100	300	Nylon Braid	½ x 3/8	NPTF(M)	18.3
601017-50	3/8	.640	50	300	Nylon Braid	½ x ¼	NPTF(M)	6.0
601021-50	1/2	.781	50	300	Nylon Braid	½ x 3/8	NPTF(M)	10.5
601022-50	1/2	.781	50	300	Nylon Braid	½ x ½	NPTF(M)	10.5
601022-100	1/2	.781	100	300	Nylon Braid	½ x ½	NPTF(M)	25.0
601026-50	3/4	1.062	50	250	Nylon Braid	¾ x ¾	NPTF(M)	15.0
601026-75	3/4	1.062	75	250	Nylon Braid	¾ x ¾	NPTF(M)	19.1
601027-50	1	1.281	50	250	Nylon Braid	1 x ¾	NPTF(M)	21.8
MEDIUM PRESSURE Oil and petroleum fluids								
12-260043	3/8	.713	25	2250	1 Wire	3/8 x 3/8	NPTF(M)	6.0
16-260043	3/8	.713	30	2250	1 Wire	3/8 x 3/8	NPTF(M)	7.1
7-260043	1/2	.846	40	2000	1 Wire	½ x ½	NPTF(M)	11.7
8-260043	1/2	.846	50	2000	1 Wire	½ x ½	NPTF(M)	14.1
HIGH PRESSURE Chassis grease								
7-260044	1/4	.691	30	5000	2 Wire	¼ x ¼	NPTF(M)	7.7
9-260044	1/4	.691	50	5000	2 Wire	3/8 x ¼	NPTF(M)	12.7
13-260044	3/8	.777	25	4000	2 Wire	¼ x ¼	NPTF(M)	9.7
5-260044	3/8	.840	50	4000	2 Wire	3/8 x ¼	NPTF(M)	19.2
TWIN WELDING ¼" Oxygen-acetylene								
601032-25	¼ dual		25	200	1 Fabric	9/16-18	LH/RH (F)	6.5
601032-50	¼ dual		50	200	1 Fabric	9/16-18	LH/RH (F)	12.1
601032-60	¼ dual		60	200	1 Fabric	9/16-18	LH/RH (F)	13.3
601032-100	¼ dual		100	200	1 Fabric	9/16-18	LH/RH (F)	24.2
TWIN WELDING ¼" 'T' Grade								
601031-25	¼ dual		25	200	1 Fabric	9/16-18	LH/RH (F)	6.5
601032-50	¼ dual		50	200	1 Fabric	9/16-18	LH/RH (F)	12.11
601031-60	¼ dual		60	200	1 Fabric	9/16-18	LH/RH (F)	14.41
601031-100	¼ dual		100	200	1 Fabric	9/16-18	LH/RH (F)	24.21

CAUTION : Be sure working pressure required does not exceed above ratings. Misapplication can result in serious operator injury. **NOTE :** Advise product to be handled, maximum temperature and pressure fitting size or sizes when ordering.

Return Policy

Materials/products returned pre-paid to Reelcraft for warranty inspection/consideration and found to be defective will be repaired/replaced at no charge to the customer per Reelcraft's discretion. Materials/products deemed not defective will require customer authorization to repair or replace at customer's expense.

Warranty Return Protocol:

1. Contact Reelcraft customer service at 1-800-444-3134 and request the Return Goods Coordinator for the authorization number. Warranty claims will require the following information before a return authorization number (RGA) can be issued.
1. Product/model number.
2. Serial number.
3. Invoice number.

Additional information regarding the specific reason for return will be required to process requests.

2. If a replacement is required prior to Reelcraft receiving your return, the items being sent will be invoiced to your account until the warranty process is completed.

3. Once given an RGA number, all corresponding inquiries, paperwork and boxes will require this number. Reelcraft reserves the right to refuse returns without an RGA number.

4. Upon receipt of your warranty return and all the warranty conditions are met, a credit memo will be issued to your account and forwarded for your records. If there is a problem with your return, a customer service representative will contact you to discuss it further.

5. If you desire, a warranty report is available to be forwarded or discussed with you regarding your specific return and Reelcraft's findings. Please contact our Return Goods Coordinator at 1-800-444-3134.

NOTE: For complete warranty information, online warranty registration, service manuals and return information please visit www.reelcraft.com.

GOODYEAR RUBBER PRODUCTS INC.
Call Toll Free: 1-866-711-4673
WebSales@GoodyearRubberProducts.com
We Ship World Wide

S = Spring Driven
H = Hand Crank
E = Electric Motor
***** Without Hose or Cable

IN: Indiana Warehouse
CA: California Warehouse
CN: Canadian Warehouse

NOTE: Unless specified with an asterisk, all Quick Ship reels include hose or cord installed.

QUICK SHIP REELS

The models listed below can be shipped same day upon request when the order is received by 11:30am local time for quantities of 5 or fewer.

Refer to **www.reelcraft.com** for the most up-to-date Quick Ship listing

Quick Ship Models

Part/Warehouse					Capacity				
Pg#	Model #	CA	IN	CN	Size	Length	Rating	Drive	Description
7	4420 OLP	X	X		1/4"	20'	300 psi	S	Air/Water
7	4425 OLP	X	X	X	1/4"	25'	300 psi	S	Air/Water
7	4400 OLP*			X	1/4"	35'	300 psi	S	Air/Water
6	RT435-OLP	X	X		1/4"	35'	300 psi	S	Air/Water
7	4435 OLP	X	X	X	1/4"	35'	300 psi	S	Air/Water
6	RT450-OLP	X	X	X	1/4"	50'	300 psi	S	Air/Water
4	5400 OLP*			X	1/4"	50'	500 psi	S	Air/Water
7	5450 OLP	X	X	X	1/4"	50'	300 psi	S	Air/Water
6	RT625-OLP	X	X		3/8"	25'	300 psi	S	Air/Water
7	4625 OLP	X	X	X	3/8"	25'	300 psi	S	Air/Water
7	4600 OLP*	X		X	3/8"	25'	500 psi	S	Air/Water
6	RT635-OLP	X	X		3/8"	35'	500 psi	S	Air/Water
7	5600 OLP*	X			3/8"	35'	500 psi	S	Air/Water
7	5635 OLP	X	X	X	3/8"	35'	300 psi	S	Air/Water
6	RT605-OLP*	X			3/8"	50'	300 psi	S	Air/Water
6	RT650-OLP	X	X	X	3/8"	50'	300 psi	S	Air/Water
19	SGA3650 OLP		X	X	3/8"	50'	138 psi	S	Air Hose
7	5605 OLP*	X	X	X	3/8"	50'	500 psi	S	Air/Water
7	5650 OLP	X	X	X	3/8"	50'	300 psi	S	Air/Water
8	7650 OLP	X	X	X	3/8"	50'	300 psi	S	Air/Water
9	DP7650 OLP	X	X		3/8"	50'	300 psi	S	Air/Water
8	7600 OLP*	X	X	X	3/8"	70'	300 psi	S	Air/Water
8	7670 OLP	X	X		3/8"	70'	300 psi	S	Air/Water
11	81100 OLP	X	X	X	3/8"	100'	300 psi	S	Air/Water
6	RT825-OLP	X			1/2"	25'	300 psi	S	Air/Water
7	A5825 OLP	X	X	X	1/2"	25'	300 psi	S	Air/Water
6	RT803-OLP*	X			1/2"	35'	300 psi	S	Air/Water
6	RT835-OLP	X	X		1/2"	35'	300 psi	S	Air/Water
18	A5835 OLBSW23		X		1/2"	35'	150 psi	S	Air/Water
6	RT850-OLP	X	X	X	1/2"	50'	300 psi	S	Air/Water
7	A5850 OLP			X	1/2"	50'	300 psi	S	Air/Water
8	7800 OLP*	X	X	X	1/2"	50'	300 psi	S	Air/Water
8	7850 OLP	X	X	X	1/2"	50'	300 psi	S	Air/Water
9	DP7850 OLP	X	X		1/2"	50'	300 psi	S	Air/Water
10	D8850 OLP	X	X		1/2"	50'	300 psi	S	Air/Water
11	82075 OLP		X		1/2"	75'	300 psi	S	Air/Water
11	82000 OLP*	X	X	X	1/2"	100'	500 psi	S	Air/Water
11	82100 OLP		X	X	1/2"	100'	300 psi	S	Air/Water
8	7925 OLP	X	X		3/4"	25'	250 psi	S	Air/Water
11	83000 OLP*			X	3/4"	50'	500 psi	S	Air/Water
11	83050 OLP	X	X	X	3/4"	50'	250 psi	S	Air/Water
11	D83075 OLP		X		3/4"	75'	250 psi	S	Air/Water
11	D84000 OLP*			X	1"	50'	500 psi	S	Air/Water
11	D84050 OLP		X		1"	50'	250 psi	S	Air/Water
7	5600 OMP*	X	X		3/8"	35'	3000 psi	S	Oil/Fluid
7	5630 OMP	X	X		3/8"	30'	2250 psi	S	Oil/Fluid
8	7600 OMP*			X	3/8"	50'	3000 psi	S	Oil/Fluid
6	RT835-OMP	X			1/2"	35'	1000 psi	S	Oil/Fluid
8	7800 OMP*	X	X	X	1/2"	50'	3000 psi	S	Oil/Fluid
8	7850 OMP	X	X	X	1/2"	50'	2000 psi	S	Oil/Fluid
9	DP7850 OMP	X	X		1/2"	50'	2000 psi	S	Oil/Fluid
7	A5825 OMP	X			1/2"	25'	2000 psi	S	Oil/Fluid
7	A5800 OMP*	X			1/2"	50'	3000 psi	S	Oil/Fluid
10	D8850 OMP	X	X		1/2"	50'	2000 psi	S	Oil/Fluid
11	82000 OMP*	X			3/4"	100'	1500 psi	S	Oil/Fluid
11	83000 OMP*	X			1/4"	50'	1500 psi	S	Oil/Fluid
7	5430 OHP	X			3/8"	30'	5000 psi	S	Grease
8	7450 OHP	X			3/8"	50'	5000 psi	S	Grease
8	7600 OHP*	X			3/8"	50'	5000 psi	S	Grease
8	7650 OHP		X		3/8"	50'	4000 psi	S	Grease
9	DP7650 OHP	X	X		3/8"	50'	4000 psi	S	Grease
10	D8650 OHP	X			3/8"	50'	4000 psi	S	Grease
11	81000 OHP*	X			3/8"	100'	5000 psi	S	Grease
21	CU6050LN*	X	X		3/8"	50'	250 psi	H	Air/Water
21	CU6100LN*	X	X		3/8"	100'	250 psi	H	Air/Water
22	EA33112 L12D*		X		3/4"	100'	1000 psi	E	Air/Water
22	EA32112 L12D*	X			1/2"	200'	1000 psi	E	Air/Water
22	EA32118 L12D*			X	1/2"	325'	1000 psi	E	Air/Water
22	CA32106 L*	X	X	X	1/2"	100'	1000 psi	H	Air/Water
22	CA32112 L*	X	X	X	1/2"	200'	1000 psi	H	Air/Water

Part/Warehouse					Capacity				
Pg#	Model #	CA	IN	CN	Size	Length	Rating	Drive	Description
22	CA33106 L*	X	X	X	3/4"	50'	1000 psi	H	Air/Water
22	CA33112 L*	X	X	X	3/4"	100'	1000 psi	H	Air/Water
22	CA33118 L*		X		3/4"	175'	1000 psi	H	Air/Water
20	H18006 M*	X			1/4"	50'	3000 psi	H	Pressure Wash
20	PW81000 OHP*	X	X	X	3/8"	100'	4500 psi	S	Pressure Wash
22	CA32106 M*	X			1/2"	100'	3000 psi	H	Air/Water
22	CA32112 M*	X	X	X	1/2"	200'	3000 psi	H	Air/Water
21	H18000 M*	X			1/2"	200'	3000 psi	H	Air/Water Hose
21	H19000 M*	X			3/4"	80'	3000 psi	H	Air/Water Hose
22	CA32118 M*	X			1/2"	325'	3000 psi	H	Air/Water Hose
22	CA37118 L*	X	X		1"	100'	300 psi	H	Air/Water
16	5600 OLS*	X			3/8"	35'	500 psi	S	Stainless, Air/Water
16	7800 OLS*	X	X		1/2"	50'	500 psi	S	Stainless, Air/Water
16	HS18000 M*	X			1/2"	200'	3000 psi	H	Stainless, Air/Water
16	HS19000 M*	X			3/4"	200'	3000 psi	H	Stainless, Air/Water
16	7800 OMS*	X			1/2"	50'	3000 psi	S	Stainless, Air/Water
13	THA7600 OMP*	X			3/8"	30'	3000 psi	S	Dual Hydraulic
13	TH88000 OMP*	X		X	1/2"	50'	3000 psi	S	Dual Hydraulic
13	TH88050 OMP			X	1/2"	50'	2000 psi	S	Dual Hydraulic
38	LD2040 163 2		X		16/3	40'	120V	S	Electric Cord, Fluorescent
38	LD2030 163 9		X		16/3	30'	125V	S	Electric Cord, Triple Outlet
38	LD2030 143 9		X		14/3	30'	125V	S	Electric Cord, Triple Outlet
38	LG3050 163 8		X		16/3	50'	120V	S	Electric Cord, Fluorescent
38	LG3050 143 9		X		14/3	50'	125V	S	Electric Cord, Triple Outlet
38	LG3040 123 9		X		12/3	40'	125V	S	Electric Cord, Triple Outlet
38	LH2080 143*		X		14/3	80'	125V	H	Electric Cord
38	LH3100*		X		10/3	100'	125V	H	Electric Cord
40	L 4545 123 7	X	X	X	12/3	45'	115V	S	Electric Cord, Duplex Outlet
40	L 5550 123 7	X	X		12/3	50'	115V	S	Electric Cord, Duplex Outlet
41	L 4050 163 1	X	X	X	16/3	50'	115V	S	Electric Cord, Incandescent
41	L 4050 162 2	X	X		16/2	50'	115V	S	Electric Cord, Fluorescent
40	L 4545 123 3	X	X	X	12/3	45'	115V	S	Electric Cord, Single Recept
40	L 4035 163 3		X		16/3	35'	115V	S	Electric Cord, Single Recept
40	L 4050 163 3	X	X	X	16/3	50'	115V	S	Electric Cord, Single Recept
40	L 5550 123 3	X	X		12/3	50'	115V	S	Electric Cord, Single Recept
14	F7900 OLP*	X			3/4"	25'	500 psi	S	Fuel
14	F7925 OLP	X	X		3/4"	25'	--	S	Fuel
14	F83000 OLP*	X			3/4"	50'	500 psi	S	Fuel
14	F83050 OLP	X			3/4"	50'	50 psi	S	Fuel
14	FD83000 OLP*	X	X		3/4"	75'	500 psi	S	Fuel
14	FD84000 OLP*	X	X	X	1"	50'	500 psi	S	Fuel
14	FD84050 OLP	X			1"	50'	50 psi	S	Fuel
14	FD9400 OLP*	X			1"	50'	500 psi	S	Fuel
14	FF9500 OLPBW*	X			1¼"	50'	300 psi	S	Fuel
14	FF9600 OLPBW*	X			1½"	50'	300 psi	S	Fuel
15	G 3050	X	X	X	3/32	50'		S	Static Discharge
15	G 3050 Y	X	X		3/32	50'		S	Static Discharge, 2@15'
15	G 3050 N	X	X		3/32	50'		S	Static Discharge, Jacketed
15	GA3100 N		X		3/32	100'		S	Static Discharge, Jacketed
48	TB 01		X			6'	0~1.5 lbs	S	Tool Balancer
48	TB 03	X	X			6'	1.5~3 lbs	S	Tool Balancer
48	TB 05	X	X			6'	3~5 lbs	S	Tool Balancer
48	TB 10		X			8'	5~10 lbs	S	Tool Balancer
48	TB 12		X			8'	8~12 lbs	S	Tool Balancer
48	TB 15		X			8'	10~15 lbs	S	Tool Balancer
48	TB 23		X			8'	16~23 lbs	S	Tool Balancer
48	TBL 10		X			8'	5~10 lbs	S	Tool Balancer, w/ Rachet
48	TBL 12		X			8'	8~12 lbs	S	Tool Balancer, w/ Rachet
48	TBL 15		X			8'	10~15 lbs	S	Tool Balancer, w/ Rachet
48	TBL 23		X			8'	16~23 lbs	S	Tool Balancer, w/ Rachet
46	CEA30006*	X	X		#2/0	150'	400 amp	H	Welding Cable
46	CEA30012*		X		#2/0	300'	400 amp	H	Welding Cable
44	TW5425 OLP	X			1/4"	25'	200 psi	S	Welding Gas, Twin Oxy/Ace.
44	TW5425 OLPT		X		1/4"	25'	200 psi	S	Welding Gas, Twin T-Grade
44	STW3450 OLP		X		1/4"	50'	300 psi	S	Welding Gas, Twin Oxy/Ace.
44	TW7400 OLP*	X			1/4"	60'	200 psi	S	Welding Gas, Twin Oxy/Ace.
44	TW7450 OLP	X	X	X	1/4"	50'	200 psi	S	Welding Gas, Twin Oxy/Ace.
44	TW7450 OLPT		X		1/4"	50'	200 psi	S	Welding Gas, Twin T-Grade
44	TW84100 OLPT	X	X		1/4"	100'	200 psi	S	Welding Gas, Twin T-Grade
47	T-1225-04*	X			1/4"	150'	200 psi	H	Welding Gas, Twin T-Grade

GOODYEAR RUBBER PRODUCTS INC.
Call Toll Free: 1-866-711-4673
WebSales@GoodyearRubberProducts.com
We Ship World Wide